MITSUBISHI ELECTRIC

Frequency
Inverter

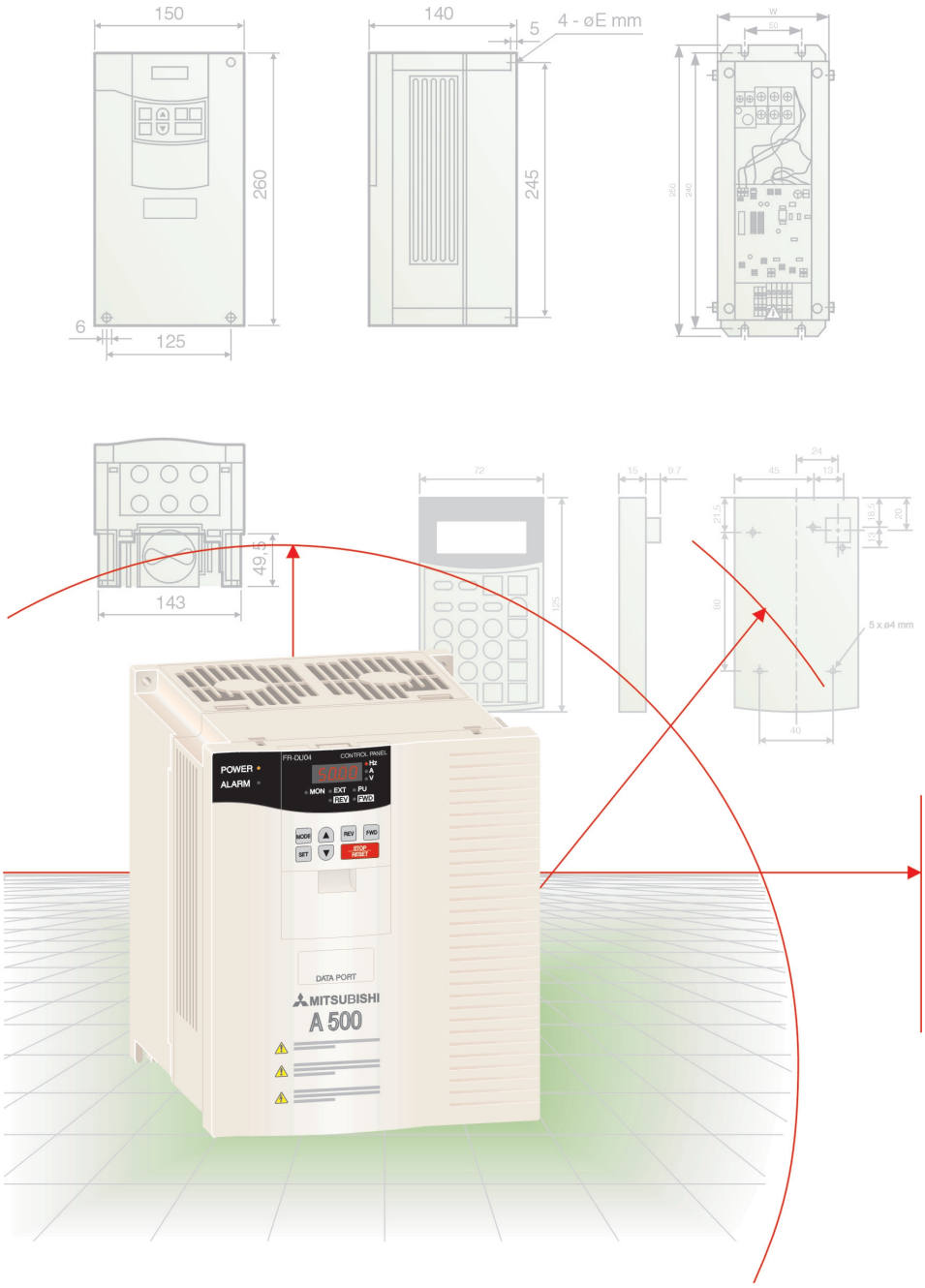

FR-A 540 EC
FR-A 540L-G EC

Technical Catalogue

2003/2004

The Inverter Generation FR-A 540 (L) EC

Vektor power for your 3phase AC drive

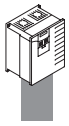

The FR-A 540 EC is the ideal inverter for very demanding drive applications requiring maximum torque and outstanding smooth running performance. Its comprehensive functions also give this unit a high level of flexibility.

The inverters of the FR-A 540 EC series are available with outputs from 0.4 kW to 55 kW. The higher power range from 75 kW to 530 kW is covered by the inverters of the FR-A 540 L-G EC series.

Further Publications within the Factory Automation Range

Technical Catalogues

Technical catalogues FR-E 500, FR-F 500 and FR-S 500

Product catalogue for frequency inverters and accessories of the FR-E 500, FR-F 500 and FR-S 500 series

Technical catalogues MELSERVO and Motion Controllers

Product catalogues for MR-J2 series amplifiers, servo motors and motion controllers with SSCNET connection

Technical catalogues PLC and HMI

Product catalogues for programmable logic controllers, operator terminals, software, and accessories of the MELSEC PLC series

Networks Technical Catalogue

Product catalogue for Master and Slave modules as well as accessories for the use of programmable logic controllers and frequency inverters in open and MELSEC networks (art. no. 136730)

Additional services

You will find current information on updates, alterations, new items, and technical support on MITSUBISHI ELECTRIC's web pages (www.mitsubishi-automation.com).

The products section of the MITSUBISHI home site includes various documentations of the whole product range by MITSUBISHI ELECTRIC as well as the current version of this catalogue on hand. All manuals and catalogues can be downloaded.
The content is updated daily and to date is provided in German and English.

About this product catalogue

This catalogue is periodically updated due to product range enlargement, technical changes or new or changed features.
Texts, figures and diagrams shown in this product catalogue are intended exclusively for explanation and assistance in planning and ordering the frequency inverter series FR-A 500(L-G) EC and the associated accessories. Only the manuals supplied with the devices are relevant for installation, commissioning and handling of the devices and the accessories. The information given in these manuals must be read before installation and commissioning of the devices or software.

Should questions arise with regard to the planning of devices described in this product catalogue, do not hesitate to contact MITSUBISHI ELECTRIC EUROPE B.V. in Ratingen (Germany) or one of its distributors (see cover page).

FREQUENCY INVERTER FR-A 540(L-G) EC

SYSTEM DESCRIPTION

OPERATION

PARAMETERS

PROTECTIVE FUNCTIONS

APPLICATIONS

ACCESSORIES

DIMENSIONS

APPENDIX

The Frequency Inverter FR-A 540(L-G) EC

The FR-A 540(L-G) EC is the appropriate inverter for demanding drive tasks with highest requirements for a high torque and excellent frequency precision. Its extensive functions allow flexible applications. The outstanding drive features of the FR-A 540(L-G) EC suit various needs:

- Conveyor technology
- Transport engineering
- Materials-handling technology
- Machining
- Textile machines
- Pumps and ventilating

The FR-A 540 EC inverters are available for a performance range of 0.4 to 55 kW. The higher range of 75 to 530 kW is covered by the inverters of the L series. All devices are designed for the connection to 3~ 380 to 480 V (50/60 Hz).

The output frequency ranges from 0.2 to 400 Hz.

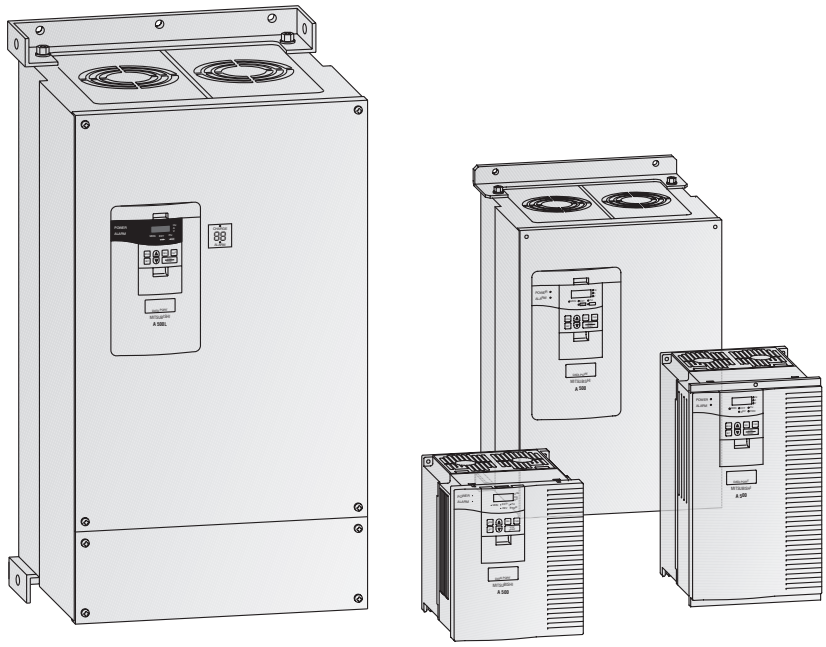

Optimised Drive Characteristics

Advanced flux vector control

The original flux vector control developed by MITSUBISHI ELECTRIC offers new performance characteristics in drive technology.

Precise operation without a PLG

The implemented RISC processor provides an auto tuning of the operating conditions of the motor and thus enables a high-presision operation unaffected by the motor temperature. This technology ensures a stable torque even at ultra low speed.

Speed control range: 1:120

The auto tuning of motor data adopts the FR-A 540(L-G) EC inverter perfectly to a broad variety of different motors.

The diagram besides illustrates the temperature/speed characteristics of the online auto tuning function.

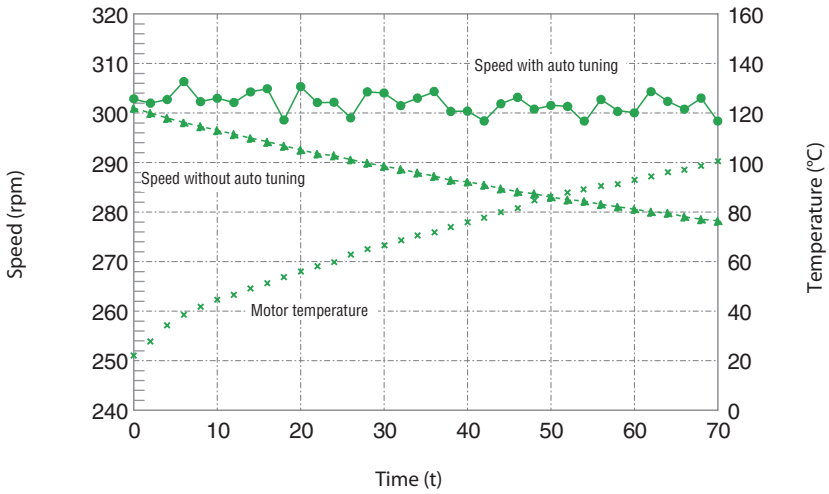

Further improved operation with PLG feedback

The drive characteristics are even improved in combination with PLG equipped motors (optional FR-A5AP).

Specifications	
Output frequency range	1:1000 (speed control)
Frequency precision	±0.02 % (speed control)
Holding torque	150 % (short-time operation)

Speed/Torque Characteristics

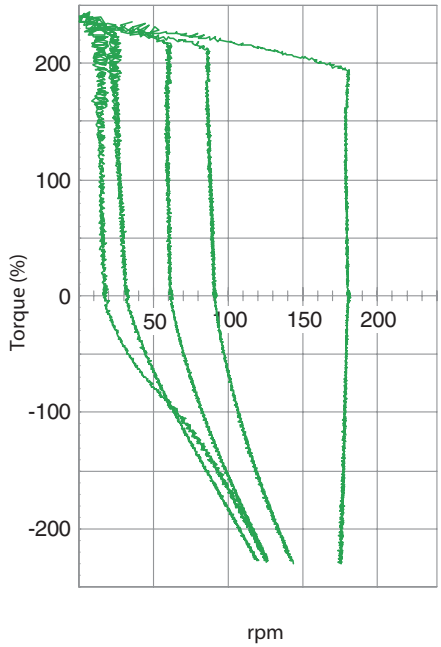

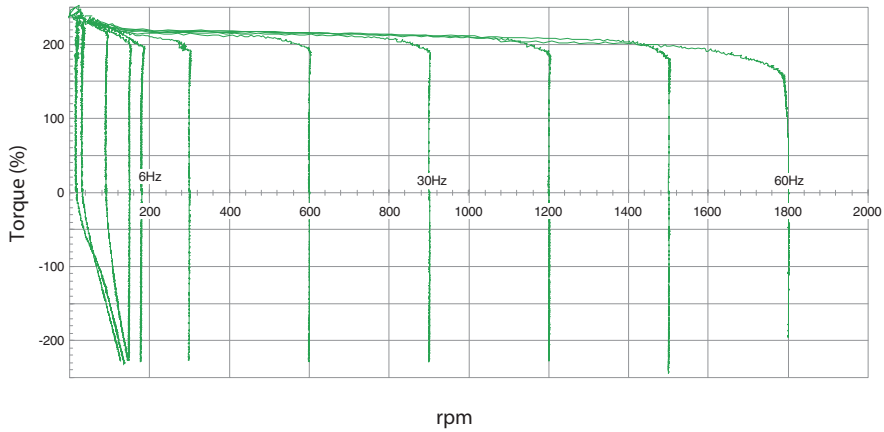

This example shows the speed/torque characteristics at low speed. The magnified view on the left illustrates the operation of the flux vector control (online auto tuning selected).

The intelligent Smart Driver

Newly developed control

The use of a newly developed ASIC component reduces uneven rotation to less than 50 % (at 1 Hz) of that of the conventional inverters. The status of the main circuit is directly monitored and controlled.

The example below demonstrates the results of this function (inverter operation frequency = 3 Hz / 3.7 kW motor).

Highly responsive current limit

The improvement of the response of the current limiter avoids the unintended occurrence of trips due to overcurrent.

Momentary large currents that occur when starting a reverse coasting motor or switching an input contactor etc. no longer trip the current limiter.

Extended functionality

The large functionality range allows a variety of applications for the inverter:

Only a few examples:

- Deceleration function on power failures: Rotary cutters, etc.
- PID control: Air-conditioning, etc.
- Brake sequence function: Conveyor belts, etc.
- Switch-over to commercial power supply: Pumps, etc.

Example for reduction of uneven rotation

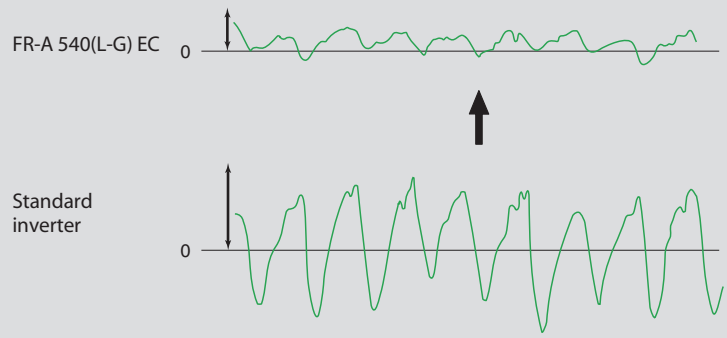

Expandability

Various extension cards are optionally available supporting the direct control by a PLC or a computer.

These options provide additional inputs and outputs such as pulse chain inputs or analog and digital inputs and outputs. Furthermore, several network options facilitate the connection to different open networks.

Refer to page 25 for further details.

User-friendly Operation

Easy operation via control panel or via software

The **FR-DU04** control panel is included as standard equipment of all inverters. It features a clear and easy operation of the inverter and displays several operational and alarm signals.. The integrated copy function makes it possible to read out the entire stored parameter set and transfer it to another frequency inverter, or compare the parameters with the settings in the other inverter. The control panel can also be connected remotely via an extension cable.

The **FR-PU04** control panel is optionally available. It provides a long-life backlight LC-display. Operational data is directly input on the numeric keypad. Eight different selectable languages are supported on the display. This control panel too can be installed either directly on the inverter or connected remotely with a cable. You can define user groups with which you can activate or change sets of user-definable parameters for specific applications.

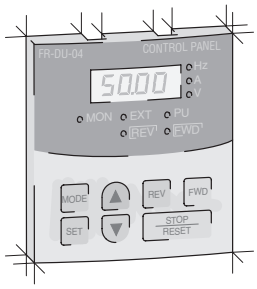

FR-DU04

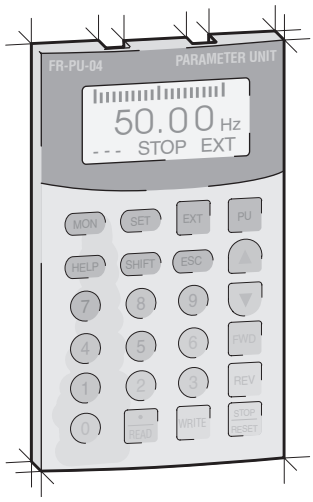

FR-PU04

The integrated copy function transfers the entire parameter settings to other inverters and thus shortens the initialisation time significantly.

In addition to control panel operation the frequency inverter can also be connected to a standard PC via an RS-485 port and operated from the PC with the optional VFD setup software package. Version 2.4 and above of this package run under Windows® 95, 98, Me and XP and also under Windows® NT and 2000. Using this software you can configure, operate and monitor multiple frequency inverters in a network or directly from a single PC or notebook computer.

User-friendly Maintenance

Easy access to cooling fans

The easily accessable cooling fans can be replaced quickly and easily if required.

The lifetime of the cooling fans can be extended significantly through a selective ON/OFF control specified by parameter 244.

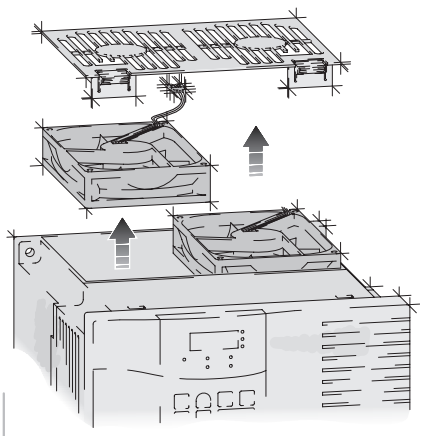

FR-A 540 EC

Easy installation and maintenance

Simple installation and removal of the control terminal block makes installation and maintenance easier.

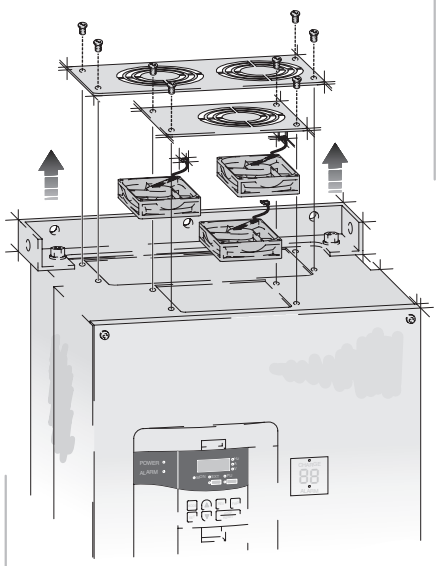

FR-A 540L-G EC

Easy transfer of parameter settings via control panel

Once the parameter settings are specified, they can be transferred from one inverter to the other via the control panel.

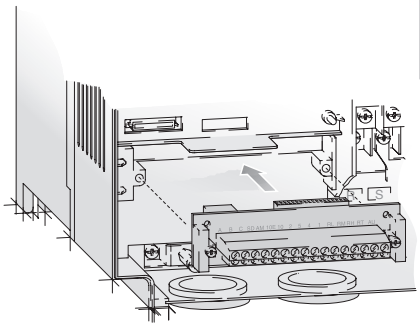

Environmentally friendly Operation

Soft-PWM Control

In addition to the conventional low-noise mode, MITSUBISHI ELECTRIC has developed its original Soft-PWM control that suppresses acoustic noise and limits RFI noise to a minimum.

The switchable PWM control facilitates a motor noise silent as whisper even at low carrier frequencies. The diagrams illustrate the difference.

In the upper diagram the frequency components are dispersed: The inverter only generates little noise that might subjectively be compared to the sound of flowing water. The noise does not sound unpleasant.

In the lower diagram the frequency components are concentrated:
The inverter generates the typical grating metallic noise.

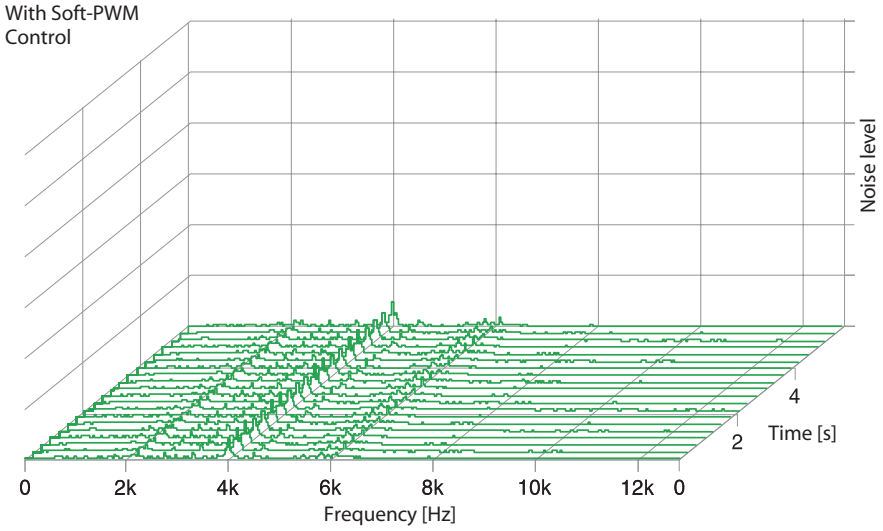

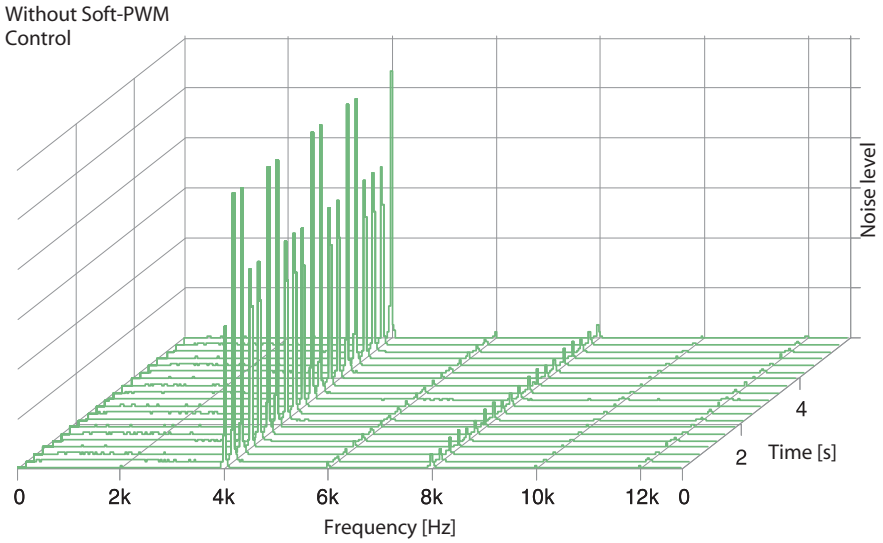

EMC compatibility

The FR-A 540(L-G) EC inverter regarding its electromagnetic compatibility complies with the European EMC directives, provided it is equipped with an optional EMC filter upon the inputs. The EMC filters are available for inverters of all performance ranges. Refer to page 26 for further details.

If necessary you can install line reactors on the input side of the frequency inverters and/or DC link reactors in the link circuit to limit inrush current and reduce the effects of mains fluctuations. The frequency inverters of the FR-A 540L-G EC series include a DC link reactor as standard equipment, and the reactor must be used with these models.

World-standard specifications

The units of the FR-A 540(L-G) EC product line are designed to be used world-wide without further effort or certifications.

- World-wide CE, UL, cUL standard compliant
- Selectable sink or source logic.
  The logic for input and output signals can be freely selected. The result is a flexible and easy customisation of the units to the needs of the world market.
- Extended rated input voltage
  3~ 380–480 V; 50 Hz / 60 Hz
  Tolerance: –15 %; +10 %
- Multiple language parameter unit
- Compatible to several world-wide common communications standards
- MS-Windows compatible world-wide standardised multi-language parameterising software

The FR-A 540(L-G) EC therefore is a world product complying with all relevant standards and easily adopting to the according needs of a country.

Communications

For the integration in an automation plant a serial interface RS485 is included as standard equipment. Through this interface up to 32 inverters can be linked up. Open communications with standardised industrial bus systems as Profibus DP (Europe), Device Net (USA), and CC-Link (Asia) can be realised easily via optional interface cards. This enables the integration of the inverter in entire automation concepts.

Specifications FR-A 540(L-G) EC

Product line			FR-A 540 EC															FR-A 540L-G EC								
			-0.4 k	-0.75 k	-1.5 k	-2.2 k	-3.7 k	-5.5 k	-7.5 k	-11 k	-15 k	-18.5 k	-22 k	-30 k	-37 k	-45 k	-55 k	-75 k	-90 k	-110 k	-132 k	-160 k	-220 k	-280 k	-375 k	-450 k
Output	Rated motor capacity [kW] ①	120 % overload capacity ❶	—	—	—	—	—	—	—	—	—	—	—	—	—	—	—	—	132	160	220	250	315	400	530	530
		150 % overload capacity ❷	0.75	1.1	2.2	3.0	4.0	7.5	11	15	18.5	22	30	37	45	55	75	90	110	132	185	220	280	375	450	530
		200 % overload capacity ❸	0.4	0.75	1.5	2.2	4.0	5.5	7.5	11	15	18.5	22	30	37	45	55	75	90	110	132	160	220	280	375	450
	Rated current [A] ②	120 % overload capacity ❶ I_{120}	—	—	—	—	—	—	—	—	—	—	—	—	—	—	—	—	312	362	518	572	732	900	1212	1212
		120 % overload capacity ❶ I_{110}	—	—	—	—	—	—	—	—	—	—	—	—	—	—	—	—	286	332	475	525	671	825	1111	1111
		120 % overload capacity ❶ I_{rated}	—	—	—	—	—	—	—	—	—	—	—	—	—	—	—	—	260	302	432	477	610	750	1010	1010
		150 % overload capacity ❷ I_{150}	2.7	4.5	7.4	10	14	21	32	44	59	65	81	107	144	162	207	270	324	390	542	648	821	1083	1299	1515
		150 % overload capacity ❷ I_{120}	2.2	3.6	5.9	8	11	17	25	35	47	52	65	85	115	130	166	216	259	312	433	518	656	866	1039	1212
		150 % overload capacity ❷ I_{rated}	1.8	3	4.9	7	9.5	14	21	29	39	43	54	71	96	108	138	180	216	260	361	432	547	722	866	1010
		200 % overload capacity ❸ I_{200}	3	5	8	12	18	24	34	46	62	76	86	114	142	172	220	288	360	432	520	650	864	1094	1444	1732
		200 % overload capacity ❸ I_{150}	2.3	3.8	6	9	14	18	26	35	47	57	65	86	107	129	165	216	270	324	390	488	648	821	1083	1299
		200 % overload capacity ❸ I_{rated}	1.5	2.5	4	6	9	12	17	23	31	38	43	57	71	86	110	144	180	216	260	325	432	547	722	866
	Rated output capacity [kVA]	120 % overlaod capacity ❶	—	—	—	—	—	—	—	—	—	—	—	—	—	—	—	—	198	230	329	364	465	572	770	770
		150 % overload capacity ❷	1.3	2.3	3.7	5.1	6.9	10.6	16.0	22.1	25.7	32.8	41.1	54.1	73.1	82.3	105	137	165	198	275	329	417	550	660	770
		200 % overload capacity ❸	1.1	1.9	3	4.6	6.9	9.1	13	17.5	23.6	29	32.8	43.4	54	65	84	110	137	165	198	248	329	417	550	660
	Overload current rating	❶	120 % of rated motor capacity for 0.5 s; 110 % for 1 min. (max. ambient temperature = 40 °C); typical e.g. for pumps and fans																							
		❷	150 % of rated motor capacity for 0.5 s; 120 % for 1 min. (max. ambient temperature = 50 °C); typical e.g. for pumps, fans and extruders																							
		❸	200 % of rated motor capacity for 0.5 s; 150 % for 1 min. (max. ambient temperature = 50 °C); typical e.g. for cranes and stone breakers																							
	Voltage		3-phase, 0 V up to power supply voltage																							
	Frequency range	Hz	0.2–400																							
	Regenerative braking torque		Max. 100 % / 5 s							Braking on internal converter supported. External brake unit connectable																
	Control method		Extended flux vector control with online auto tuning of motor data or V/f control																							
	Modulation control		Sine evaluated PWM, Soft PWM																							
	Carrier frequency	kHz	0.7–14.5 (user adjustable)															0.7 / 1 / 2.5 (user adjustable) up to 5 kHz								
Input	Power supply voltage		3-phase, 380–480 V, -15 % / +10 %																							
	Power supply frequency		50 / 60 Hz, ±5 %																							
	Rated input capacity [kVA]	120 % overload capacity ❶	—	—	—	—	—	—	—	—	—	—	—	—	—	—	—	—	198	230	329	364	465	572	770	770
		150 % overload capacity ❷	1.8	3	5.4	6.1	9	14	20	26	36	41	51	66	90	100	126	137	165	198	275	329	417	550	660	770
		200 % overload capacity ❸	1.5	2.5	4.5	5.5	9	12	17	20	28	34	41	52	66	80	100	110	137	165	198	248	329	417	550	660
Control specifications	Frequency setting values	Analog input	0.015 Hz / 50 Hz (connecting terminal 2: 12 bits / 0–10 V; 11 bits / 0–5 V, connecting terminal 1: 12 bits /-10 – +10 V; 11 bits / -5 – +5 V																							
		Digital input	0.01 Hz / 50 Hz (incl. pulse input)																							
	Frequency precision		±0.2 % of max. output frequency (temperature range 25 °C±10 °C) during analog input; ±0.01 % of max. output frequency during digital input																							
	Voltage / frequency characteristics		Base frequency adjustable from 0 to 400 Hz; constant torque or variable torque selectable; optional flexible 5-point V/f characteristics																							
	Starting torque		150 % / 0.5 Hz (for extended vector control)																							
	Acceleration / deceleration time		0; 0.1 to 3600 s individual settings																							
	Acceleration / deceleration characteristics		Linear or S-form course, user selectable																							
	DC braking		Braking time and braking moment adjustable; Operating frequency: 0–120 Hz, operating time: 0–10 s, voltage: 0–30 % (adjustable externally)																							
	Torque boost		Manual torque boost																							
	Stall prevention		Respones threshold 0–200 %, user adjustable, also via analog input																							0 –150 %
	Motor protection		Electronic motor protection relay (rated current user adjustable)																							
Control signals for operation	Frequency setting values	Analog input	0–5 V DC, 0–10 V DC, 0–±10 V DC, 4–20 mA																							
		Digital input	From control panel or optional circuit board																							
	Input signals	Starting signal	Individual selection of forward / reverse run Starting signal self retaining input																							
		Speed selection	Up to 15 speed settings can be selected (each speed can be preset from 0 to 400 Hz). The current speed can be changed via the control panel during operation.																							
		2nd/3rd acceleration / deceleration time	0 to 3600 seconds Acceleration and deceleration time can be set individually.																							
		JOG operation	Jog operation via control panel or special JOG terminal																							—
		Current input selection	Frequency setting via current input signal 0/4 to 20 mA DC																							
		Output stop	Instant cutoff of inverter output (frequency and voltage)																							
		Error reset	The error indication (alarm signal) is reset with the reset of the protective function																							

① At 150 % rating a maximum ambient temperature of 40 °C is allowed and the PWM carrier frequency must be less than 1 kHz (not for FR-A540L-G)
② The rating 120 % is available with serial marking „type 2“ only (shipping from 02.2003).

Product line			FR-A 540 EC															FR-A 540L-G EC								
			-0.4 k	-0.75 k	-1.5 k	-2.2 k	-3.7 k	-5.5 k	-7.5 k	-11 k	-15 k	-18.5 k	-22 k	-30 k	-37 k	-45 k	-55 k	-75 k	-90 k	-110 k	-132 k	-160 k	-220 k	-280 k	-375 k	-450 k
Control signals for operation	Output signals	Operation state	Six output types can be selected: Inverter running, frequency reached, instantaneous power failure (undervoltage), frequency detection, 2nd frequency detection, 3rd frequency detection, in program mode operation. In PU operation: overload warning, regenerative brake pre-alarm, electronic thermal relay pre-alarm, zero current detection, output current detection, PID lower limit, PID upper limit, PID forward run, PID reverse run, commercial power supply-inverter switchover MC 1-2-3, operation ready, brake release request, fan trouble, and fin overheat pre-alarm (open collector output).																							
		Alarm functions	Relay output ... contactor (230 V AC / 0.3 A , 30 V DC/ 0.3 A) Open collector output ... error message through alarm code (4 bits)																							
		Analog signal or pulse train	One of the following output types can be selected: Output frequency, motor current (constant or peak value), output voltage, frequency setting value, operation speed, motor torque, converter output voltage (constant or peak value), regenerative brake duty, electronic thermal relay load rate, input power, output power, load meter and motor excitation current. Pulse train output (1440 Hz / full scale), or analog output (0 to 10 VDC).																							
Display options	Displayed on control panel (FR-PU04/ FR-DU04)	Operating state	Output frequency, motor current (constant or peak value), output voltage, frequency setting value, operation speed, motor torque, overload, converter output voltage (constant or peak value), electronic thermal relay load rate, input power, output power, load meter, motor excitation current, cumulative power ON time, current operation time, cumulative power, regenerative brake duty, and motor load rate.																							
		Alarm display	Error details are displayed after a protective function is activated. Up to 8 error codes can be stored.																							
	Additional displays on control panel FR-PU04	Operating state	Signal state of input and output terminals, indication of installed options, indication of terminal assignment state.																							
		Alarm display	Output voltage, output current, output frequency, cumulative power ON time before activation of protective function.																							
		Interactive operating guide	Interactive guide for operation and troubleshooting via help function																							
Protection	Functions		Overcurrent cutoff (during acceleration, deceleration, constant speed), regenerative overvoltage cutoff, undervoltage, instantaneous power failure, overload cutoff (electronic thermal relay), brake transistor error (FR-A 540 with 0.4 k to 7.5 k only) , ground fault overcurrent, output short circuit, overheating of main circuit, stall prevention, overload warning, brake transistor overheating (FR-A 540 only), fin overheating, fan error, option error, parameter error, PU connection error, output phase error, CPU error, output of group error message via relay contact (220 V AC / 0.3 A; 30 V DC / 0.3 A). FR-A 540L only: number of retries, open output phase, short-circuit in 24 V DC power supply, short-circuit in power supply of control panel, main circuit error																							
Others	Cooling		Self-cooling			Fan-cooling																				
	Power loss ③ [kW]	120 % overload capacity ❶	—	—	—	—	—	—	—	—	—	—	—	—	—	—	—	2.75	4.12	4.8	6.75	7.5	9.45	12.0	10.6	10.6
		150 % overload capacity ❷	0.04	0.05	0.07	0.1	0.13	0.18	0.26	0.38	0.53	0.56	0.73	0.92	1.24	1.43	1.74	2.75	3.37	4.12	5.55	6.75	8.59	11.25	9.0	10.6
		200 % overload capacity ❸	0.05	0.07	0.1	0.15	0.22	0.28	0.39	0.5	0.68	0.83	0.95	1.2	1.59	1.92	2.45	2.25	2.75	3.37	4.12	4.8	6.75	8.59	7.5	9.0
	Weight	kg	3.5	3.5	3.5	3.5	3.5	6	6	13	13	13	13	24	35	35	36	57	66	66	120	120	220	235	490	500

③ These values refer to a PWM carrier frequency of 14.5 kHz for the FR-A 540 EC and to 1 kHz for the FR-A 540L-G EC.
At 150 % rating a maximum ambient temperature of 40 °C is allowed (not for FR-A540L-G)

Product line		FR-A 540 EC														
		-0,4 k	-0,75k	-1,5 k	-2,2 k	-3,7 k	-5,5 k	-7,5 k	-11 k	-15 k	-18,5k	-22 k	-30 k	-37 k	-45 k	-55 k
Order information	Art. no.	68020	68021	68023	68024	68025	68026	68027	68028	68029	68030	68032	68033	68034	68035	68036

Product line		FR-A 540L-G EC (type E1)								
		-75 k	-90 k	-110 k	-132 k	-160 k	-220 k	-280 k	-375 k	- 450 k
Order information	Art. no.	141018	141019	141020	141021	141042	141043	141044	142589	142590

General Operating Conditions

Item	Specifications
Ambient temperature in operation	-10 °C to +50 °C (non-freezing) For selection of the load characteristics with variable torque the max. temperature is 40 °C (not for FR-A 540L-G).
Storage temperature	-20 – +65 °C
Ambient humidity	Max. 90 % RH (non-condensing)
Altitude	Max. 1000 m above NN
Protection rating	Up to 22kW: IP 20 / from on 30 kW: IP00
Shock resistance	10 G (3 times each in 3 directions)
Vibration resistance	2 G: resistance to vibrations from 10 to 55 Hz for 2 hours along all 3 axes
Ambience conditions	For indoor use only, avoid environments containing corrosive gases, install in a dust-free location.
Certifications	UL / CSA / CE / EN

Block diagram

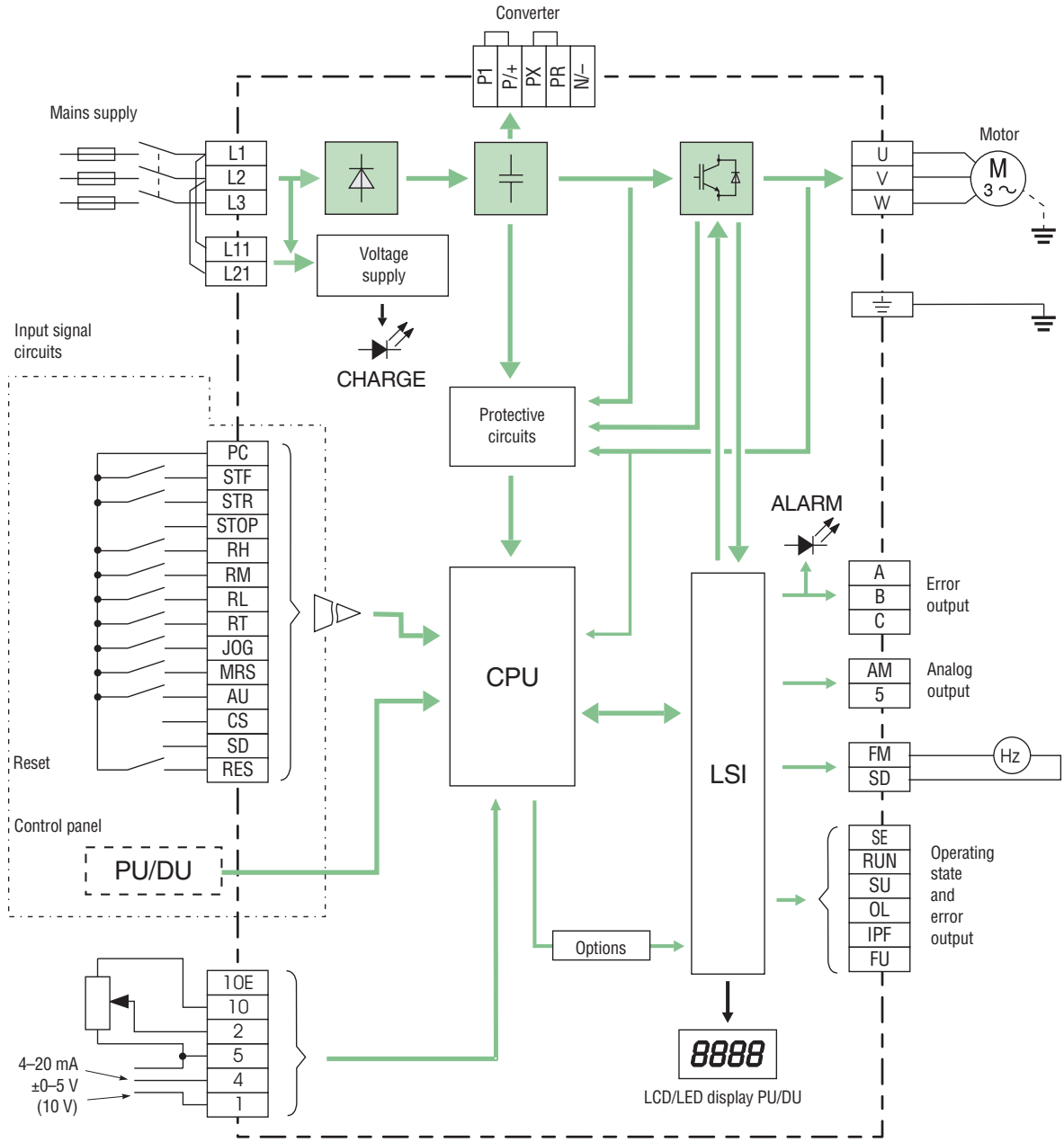

Terminal Assignment of Main Circuit Terminals

Function	Terminal	Terminal name	Description
Main circuit connection	L1, L2, L3	Mains supply connection	Mains power supply of the inverter (380–480 V AC, 50/60 Hz)
	P/+, N/-	External brake unit connection	An external brake unit can be connected to the terminals P/+ and N/-.
	P/+, PR	Optional external brake resistor connection	An optional external brake resistor can be connected to the terminals P/+ and PR. Disconnect the jumper from terminals PR and PX before (FR-A 540-0,4 k to 7,5 k only).
	P1, P/+ (P0, P1)	Converter choke coil connection	An optional choke coil can be connected to the terminals P1 and P/+, (for inverters from 375 k to 450 k between P0 and P1). For all FR-A 540L-G inverters the supplied choke coil has to be installed to the mentioned terminals.
	U, V, W	Motor connection	Voltage output of the inverter (3-phase, 0 V up to power supply voltage, 0.2–400 Hz)
	L11, L21	Control circuit mains supply connection	Mains power supply input for a separate supply of the control circuit
	⏚	PE	Protective earth connection of inverter

Terminal Asssignment of Signal Terminals

Function	Terminal	Terminal name	Description
Control connection	STF	Forward rotation start	The motor rotates forward, if a signal is applied to terminal STF
	STR	Reverse rotation start	The motor rotates reverse, if a signal is applied to terminal STR
	STOP	Start self-retaining selection	The start signals are self-retaining, if a signal is applied to terminal STOP
	RH, RM, RL	Multi-speed selection	Preset of 15 different output frequencies
	JOG	JOG mode selection	The JOG mode is selected, if a signal is applied to terminal JOG (factory setting). The inverters FR-A 540L-G 375 k and 450 k are not equipped with a JOG terminal. The start signals STF and STR determine the rotation direction.
	RT	Second parameter settings	A second set of parameter settings is selected, if a signal is applied to terminal RT.
	MRS	Output stop	The inverter lock stops the output frequency without regard to the delay time. By changing a parameter the pulsed voltage of the DC braking is output as long as the inverter lock is active.
	RES	RESET input	An activated protective circuit is reset, if a signal is applied to the terminal RES (t > 0,1 s).
	AU	Current input selection	Only, if the AU signal is ON, the inverter can be operated with the 4–20 mA frequency setting signal.
	CS	Automatic restart after power failure selection	The inverter restarts automatically after a power failure, if a signal is applied to the terminal CS.
Common	SD	Common sink for contact input/ reference potential	A determined control function is activated, if the corresponding terminal is connected to the terminal SD. The SD terminal is isolated from the digital circuits via optocouplers. Reference potential for the pulse output FM. The terminal is isolated from the reference potential of the control circuit. Common reference potential for 24 V DC/0.1 A output (PC terminal).
	PC	24 V DC output	24 V DC/0.1 A output. Internal power supply source logic.
Setting value specification	10 E	Voltage output for potentiometer	Output voltage 10 V DC. Max. output current 10 mA. Recommended potentiometer: 1 kΩ, linear
	10		Output voltage 5 V DC. Max. output current 10 mA. Recommended potentiometer: 1 kΩ, linear
	2	Input for frequency setting value signal	The voltage setting value 0–5 (10) V is applied to this terminal. The voltage range is preset to 0–5 V. The input resistance is 10 kΩ.
	5	Reference point for frequency setting value signal	Terminal 5 is the reference point for all analog setting values and for the analog output signal AM. The terminal is not isolated from the reference potential of the control circuit and **must not be earthed**.
	1	Auxiliary input for frequency setting value signal 0–±5 (10) V DC	An additional voltage setting value signal of 0–±5 (10) V DC can be applied to terminal 1. The voltage range is preset to 0–±10 V DC. The input resistance is 10 kΩ.
	4	Input for current setting value signal DC 4–20 mA	The current setting value signal (DC 0/4–20 mA) is applied to this terminal. The input resistance is 250 Ω.
Signal outputs	A, B, C	Potential free alarm output	The alarm is output via relay contacts. The block diagram shows the normal operation and voltage free status. If the protective function is activated, the relay picks up.The maximum contact load is 200 V AC / 0,3 A or 30 V DC / 0,3 A.
	RUN	Signal output for motor operation	The output is switched low, if the inverter output frequency is equal to or higher than the starting frequency. The output is switched high, if no frequency is output or the DC brake is in operation.
	SU	Signal output for frequency setting value / current value comparison	The SU output supports a monitoring of frequency setting value and frequency current value. The output is switched low, once the frequency current value (output frequency of the inverter) approaches the frequency setting value (determined by the setting value signal) within a preset range of tolerance.
	IPF	Signal output for instantaneous power failure	The output is switched low for a temporary power failure within a range of 15 ms $\leq t_{IPF} \leq$ 100 ms or for under voltage.
	OL	Signal output for overload alarm	The OL is switched low, if the output current of the inverter exceeds the current limit preset in parameter 22 and the stall prevention is activated. If the output current of the inverter falls below the current limit preset in parameter 22, the signal at the OL output is switched high.
	FU	Signal output for monitoring output frequency	The output is switched low once the output frequency exceeds a value preset in parameter 42 (or 43). Otherwise the FU output is switched high.
	SE	Reference potential for signal outputs	Reference potential for the signals RUN, SU, OL, IPF, and FU. This terminal is isolated from the reference potential of the control circuit P24.
	FM	Pulse output	One of 16 monitoring functions can be selected, e.g. external frequency output. FM and AM output can be used simultaneously. The functions are determined by parameters. Either a moving coil gauge (measuring range: 1 mA) or a pulse counter with an initial setting of 1440 pulses/s at 60 Hz output frequency (internal resistance of load min. 10 kΩ).
	AM	Analog output	One of 16 monitoring functions can be selected, e.g. external frequency output. FM and AM output can be used simultaneously. The functions are determined by parameters. A DC voltmeter can be connected. The max. output voltage is 10 V.
Interface	—	Connection of control panel (RS485)	Communications via RS485 I/O standard: RS485, Multi-Drop operation, max. 19200 Baud

Control Panel FR-DU04 (Standard)

The control panel FR-DU04 is the standard control panel of the inverter FR-A 540(L-G) EC and is included as standard equipment.

The control panel supports the input and display of several control variables (parameters) and a monitoring and output of current operational data. The data is displayed on a 4-digit LED display.

Besides a display and setting of parameters all operating states of the inverter and motor can be monitored. Faults are indicated by error codes.

The control panel can alternatively be attached directly on the inverter or via cable connection mounted remotely, e.g. in a control cabinet.

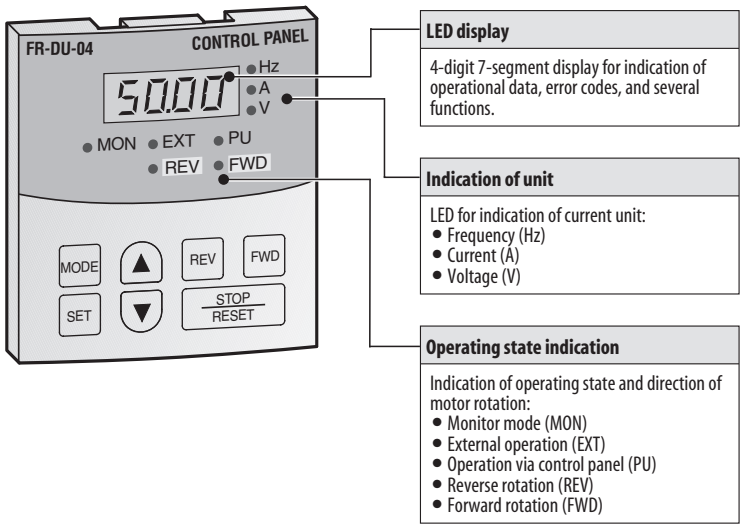

Menu Guide to the Control Panel FR-DU04

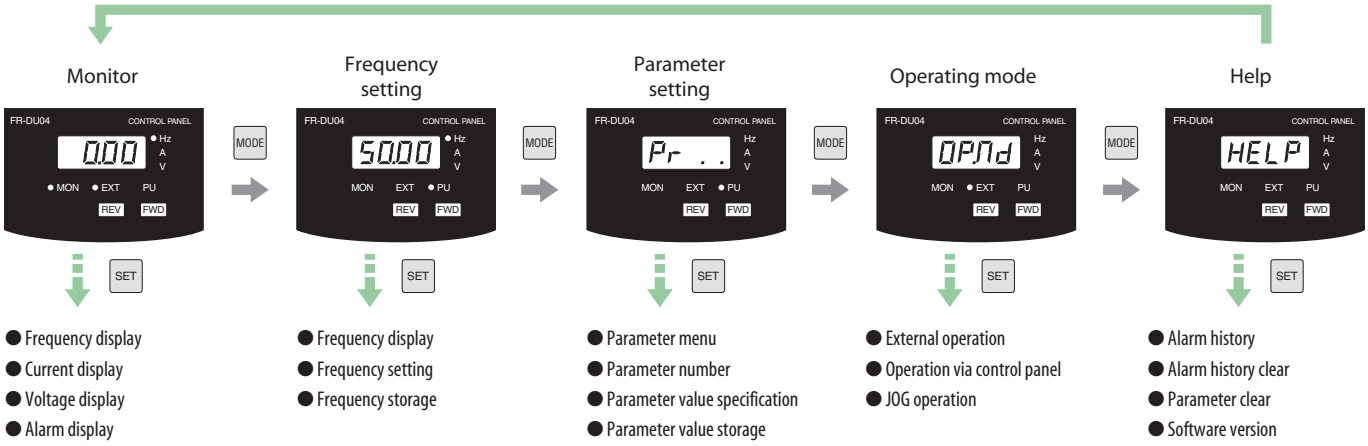

Copying parameters

Via the control panel parameters can be transferred from one inverter to another. For that purpose first read out the parameter settings from the source inverter, then connect the control panel to the destination inverter and transfer the parameters. Inititalising and setting times are reduced significantly that way.

The example besides illustrates the procedure of copying parameters via the control panel FR-DU04.

① Press the MODE key twice and the ▼ key twice

② Press and hold the SET key for 1.5 s, to read all parameter values

③ Press the ▲ key, then press and hold the SET key for 1.5 s, to write all values to the destination inverter

④ Press the ▲ key, then press and hold the SET key for 1.5 s, to verify values

Control Panel FR-PU04 (Optional)

The control panel FR-PU04 with extended functions is available as optional accessory. This control panel provides a 10-key keypad for a direct entering of numerical values. A 4-row LC display returns operational data, parameter names or status and error messages in uncoded text. The control panel displays text in the following selectable languages: English, German, French, Spanish, Swedish, Italian, Finnish, and Japanese.

In addition to the functions of the standard control panel the FR-PU04 displays and monitors 21 different values and states in total.

The control unit FR-PU04 is used instead of the standard control unit FR-DU04 and can be replaced by this after use.

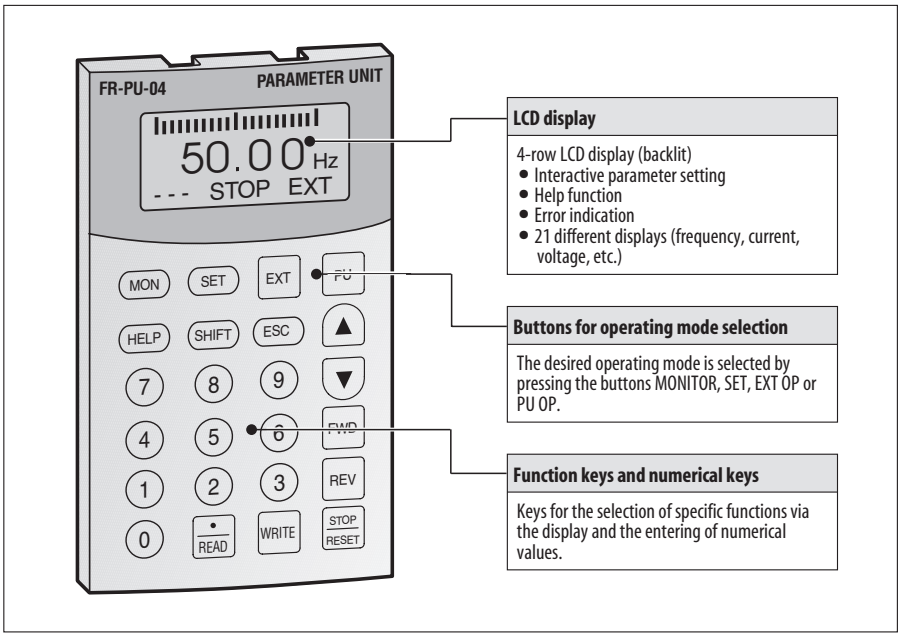

Menu Guide to the Control Panel FR-PU04

Displaying the parameter list

Press the SET key to enter the parameter setting menu. Then press the HELP key to display the parameter lists. After pressing the READ key, the according parameter value will be read in.

Copying parameters

Press the SET key and then the ▲ key to enter the copy mode. Now you find three choices:

- Press the READ key to read out all parameters from the inverter.
- Press the WRITE key to write parameters to the inverter.
- Press the ▼ key to verify the values stored in the control panel and the inverter.

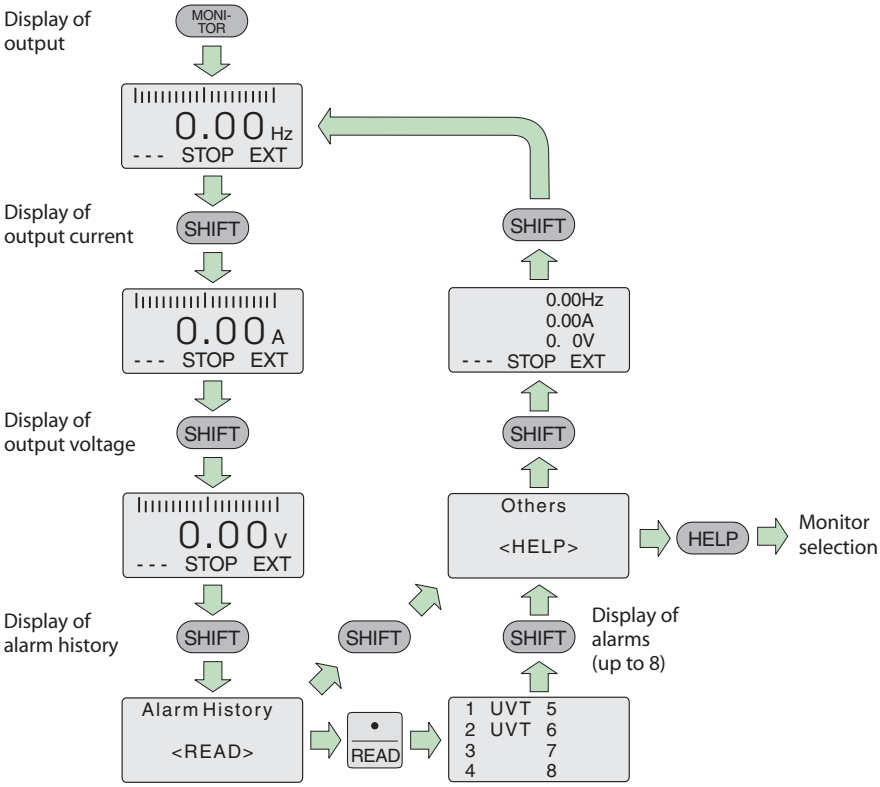

Operating Modes

The inverter can alternatively be operated via external signals or directly via the control panels FR-DU04 or FR-PU04.

The operating mode on the control panel FR-DU04 is selected in the operating mode menu or on the control panel FR-PU04 by pressing the EXT OP key for external signal operation and PU OP for control panel operation.

Sample connection

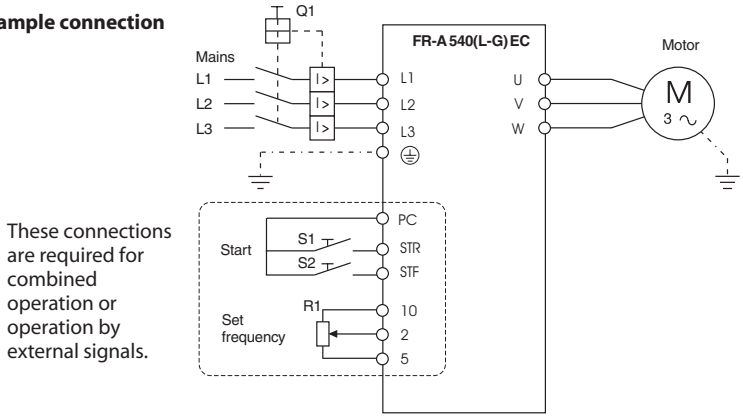

These connections are required for combined operation or operation by external signals.

Operation from the control panel

The direction of rotation and frequency setting of the inverter are controlled from the control panel.

The setting of the output frequency is increased or decreased via the ▲ and ▼ keys.

The example below shows the operational steps for a frequency setting with following motor start and motor stop.

① Press the MODE key

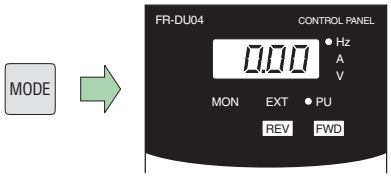

② Set frequency with SET key

③ Start motor

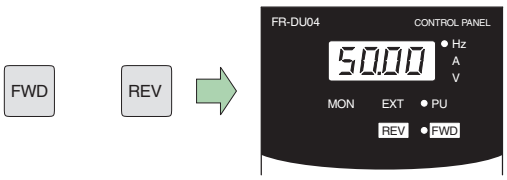

or

④ Stop motor

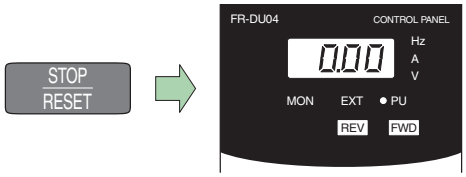

Operation by external signals

The direction of rotation and frequency setting of the inverter are controlled by external signals. The following figure shows the display on the control panel FR-DU04 for forward rotation of the motor and a frequency of 50 Hz.

Combined operation

In addition to the operation by external signals and the operation from the control panel (FR-DU04 / FR-PU04) the inverter can be operated in combined operation mode.

- Setting value preset from the control panel and external starting signal.
- External setting value signal and starting signal from the control panel.

VFD Setup Software

The VFD Setup Software is a powerful tool for the operation of your frequency inverter. The software (version 2.4) is MS Windows 95/98/XP and NT/2000 compatible, and therefore allows the inverter operation via any conventional personal computer. Several frequency inverters can be set up, operated, and monitored simultaneously across a network or via a personal computer or notebook. The software is designed for all frequency inverters of the MITSUBISHI FR-A 500, FR-E 500, FR-F 500 and FR-S 500 series.

The connection between personal computer and inverter is established either via an RS485 network or directly via an SC-FR PC adapter cable available separately.

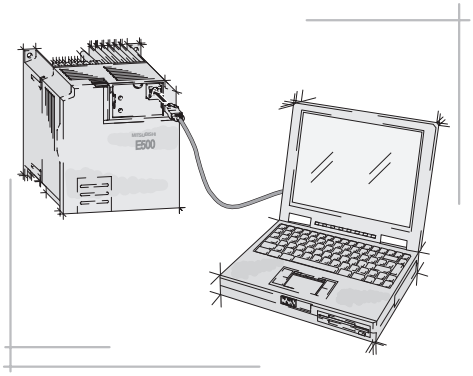

Benefits

- System settings
  Due to the network capabilities of the inverter up to 32 frequency inverters can be operated simultaneously.
- Parameter settings
  By means of overall and function related overviews different parameters can be adjusted easily.
- Display functions
  The comprehensible display functions enable data, analog, oscillograph, and alarm displays.
- Diagnostis
  The analysis of the inverter status provides a thorough error correction.
- Test operation
  The test operation provides a simulation of the operation and adjustment via the auto-tuning function.
- File management
  Parameters can be saved on the personal computer and printed out.
- Help
  The extensive online help provides support concerning all questions regarding settings and operation.

Parameter setting

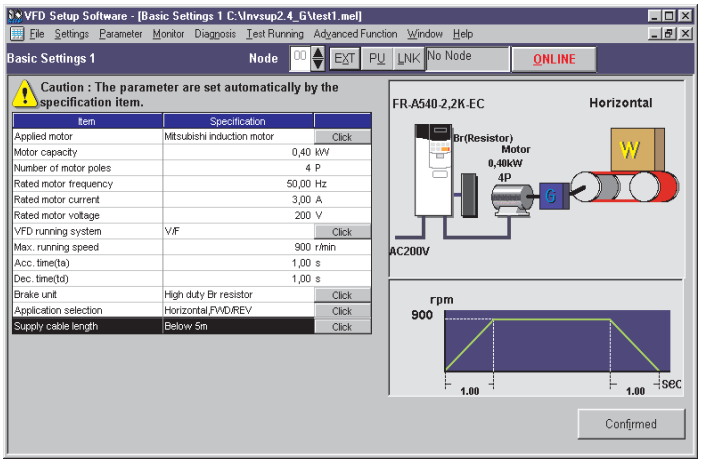

Display and monitor

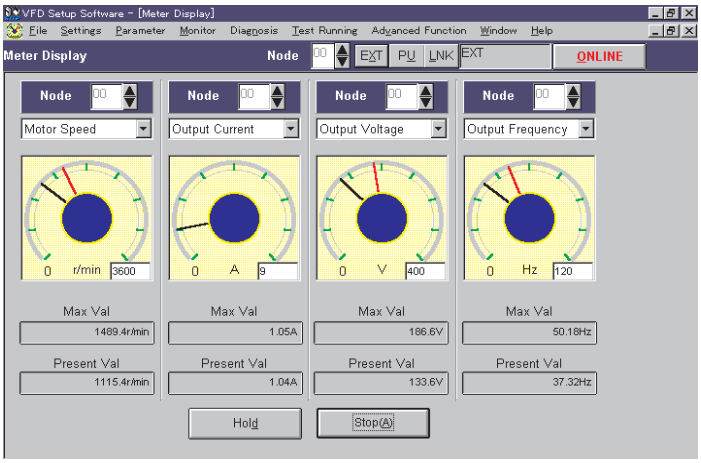

Test operation

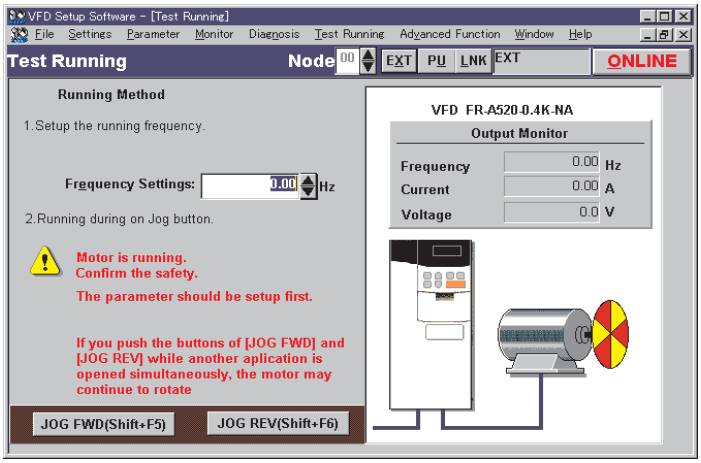

Parameter Overview

Function	Parameter	Meaning	Setting range FR-A 540 EC	Setting range FR-A 540L-G EC	Default setting FR-A 540 EC	Default setting FR-A 540L-G EC
Basic parameters	0	Torque boost (manual) ① ⑧	0–30 %		6 % / 4 % / 3 % / 2 % ⑧	1 %
	1	Maximum output frequency	0–120 Hz	0–60 Hz	120 Hz	60 Hz
	2	Minimum output frequency	0–120 Hz		0 Hz	
	3	V/f characteristics (base frequency)	0–400 Hz		50 Hz	
	4	1. Multispeed (high) preset - RH ⑦	0–400 Hz		60 Hz	
	5	2. Multispeed (high) preset - RM ⑦	0–400 Hz		30 Hz	
	6	3. Multispeed (high) preset - RL ⑦	0–400 Hz		10 Hz	
	7	Acceleration time	0–360 s / 0–3600 s		5 s / 15 s ⑤	15 s
	8	Deceleration time	0–360 s / 0–3600 s		5 s / 15 s ⑤	15 s
	9	Electronic thermal overload relay (motor protection)	0–500 A	0–3600 A	Rated current	
Parameters for standard drive operation	10	DC injection brake (initial frequency)	0–120 Hz / 9999		3 Hz	
	11	DC injection brake (operation time)	0–10 s / 8888		0.5 s	
	12	DC injection brake (voltage)	0–30 %		4 % / 2 % ⑤	1 %
	13	Starting frequency	0–60 Hz		0.5 Hz	
	14	Selection of load pattern ①	0–5		0	
	15	JOG frequency	0–400 Hz		5 Hz	
	16	JOG acceleration and deceleration time	0–360 s / 0–3600 s		0.5 s	
	17	MRS input selection	0/2		0	
	18	High-speed max. frequency	120–400 Hz	0–400 Hz	120 Hz	60 Hz
	19	Max. output voltage ①	0–1000 V / 8888 / 9999		8888	
	20	Acceleration / deceleration reference frequency	1–400 Hz		50 Hz	
	21	Acceleration / deceleration time increments	0/1		0	
	22	Stall prevention operation level ⑦	0–200 % / 9999		150 %	150 % (M = const.) 120 % (M ~ n^2) ⑩
	23	Stall prevention operation at double speed	0–200 % / 9999		9999	
	24	4. Multispeed preset ⑦	0–400 Hz / 9999		9999	
	25	5. Multispeed preset ⑦	0–400 Hz / 9999		9999	
	26	6. Multispeed preset ⑦	0–400 Hz / 9999		9999	
	27	7. Multispeed preset ⑦	0–400 Hz / 9999		9999	
	28	Multispeed input compensation	0 / 1		0	
	29	Acceleration / deceleration pattern	0 / 1 / 2 / 3		0	
	30	Regenerative function selection	0 / 1 / 2		0	
	31	Frequency jump 1A	0–400 Hz / 9999		9999	
	32	Frequency jump 1B	0–400 Hz / 9999		9999	
	33	Frequency jump 2A	0–400 Hz / 9999		9999	
	34	Frequency jump 2B	0–400 Hz / 9999		9999	
	35	Frequency jump 3A	0–400 Hz / 9999		9999	
	36	Frequency jump 3B	0–400 Hz / 9999		9999	
	37	Speed display	0,1–9998		0	
Settings of control outputs	41	Setting value / current value comparison (SU output)	0–100 %		10 %	
	42	Output frequency monitoring (FU output)	0–400 Hz		6 Hz	
	43	Output frequency monitoring / reverse rotation	0–400 Hz / 9999		9999	
2nd parameter settings	44	2. Acceleration / deceleration	0–360 s / 0–3600 s		5 s	
	45	2. Deceleration time	0–360 s / 0–3600 s / 9999		9999	
	46	2. Manual torque boost ①	0–30 % / 9999		9999	
	47	2. V/f characteristics (base frequency) ①	0–400 Hz / 9999		9999	
	48	2. Stall prevention operation current	0–200 %		150 %	150 % (M = const.) 120 % (M ~ n^2) ⑩
	49	2. Stall prevention operation frequency	0–400 Hz / 9999		0 Hz	
	50	2. Output frequency monitoring	0–400 Hz		30 Hz	

Function	Parameter	Meaning	Setting range		Default setting	
			FR-A 540 EC	FR-A 540L-G EC	FR-A 540 EC	FR-A 540L-G EC
Display functions	52	LCD main display on control panel ⑦	0 / 5–14 / 17 / 18 / 20 / 23 / 24 / 25 / 100		0	
	53	Bar graph in LCD display ⑦	0–3 / 5–14 / 17 / 18		1	
	54	FM terminal function selection ⑦	1–3 / 5–14 / 17 / 18 / 21		1	
	55	Frequency monitoring reference ⑦	0–400 Hz		50 Hz	
	56	External current monitoring reference ⑦	0–500 A	0–3600 A	Rated current	
Restart	57	Restart coasting time after power failure	0–5 s / 9999	0–30 s / 9999	9999	
	58	Restart cushion time before automatic synchronisation	0–60 s		1 s	
Aux. functions	59	Selection of digital motor potentiometer	0 / 1/2		0	
Operation settings	60	Intelligent mode selection	0–8		0	
	61	Rated current for intelligent mode	0–500 A / 9999	0–3600 A / 9999	9999	
	62	Current limit for intelligent mode (acceleration)	0–200 % / 9999		9999	
	63	Current limit for intelligent mode (deceleration)	0–200 % / 9999		9999	
	64	Starting frequency for vertical applications in intelligent mode	0–10 Hz / 9999		9999	
	65	Selection of protective function for automatic restart	0–5		0	
	66	Starting frequency for stall prevention at boost frequency	0–400 Hz		50 Hz	
	67	Number of restart retries	0–10 / 101–110		0	
	68	Waiting time for automatic restart retry	0–10 s		1 s	
	69	Counting of automatic restart retries	0		0	
	70	Regenerative brake duty	0–15 % / 0–30 % ⑨	0–100 %	0 %	
	71	Motor selection	0–8 / 13–18		0	
	72	PWM function ⑦	0–15	0–5	2	1
	73	Specification of setting value input data	0–5 / 10–15		1	
	74	Setting value signal filter	0–8		1	
	75	Reset condition / connection error / stop ⑦	0–3 / 14–17	0–3 / 14–17 / 100–117	14	
	76	Coded alarm output	0 / 1 / 2 / 3		0	
	77	Write protection for parameters ⑦	0 / 1 / 2		0	
	78	Prevention of reverse rotation	0 / 1 / 2		0	
	79	Operation mode selection	0–8		0	
Motor constants	80	Rated motor capacity for flux vector control	0.4–55 kW / 9999	0–3600 kW / 9999	9999	
	81	Number of motor poles for flux vector control	2 /4 /6 /12 /14 /16 /9999		9999	
	82	Motor excitation current ③	0 – / 9999		9999	
	83	Rated voltage of motor for auto-tuning	0–1000 V		400 V	
	84	Rated motor frequency	50–120 Hz / 9999		50 Hz	
	89	Speed control gain	0–200 %		100 %	
	90	Motor constant A ③	0 – / 9999		9999	
	91	Motor constant B ③	0 – / 9999		9999	
	92	Motor constant C ③	0 – / 9999		9999	
	93	Motor constant D ③	0 – / 9999		9999	
	94	Motor constant E ③	0 – / 9999		9999	
	95	Online auto-tuning selection	0 / 1		0	
	96	Auto-tuning setting / status	0 / 1 / 101		0	
VF 5 points adjustable	100	V/f1 frequency ①	0–400 Hz / 9999		9999	
	101	V/f1 frequency voltage ①	0–1000 V		0	
	102	V/f2 frequency ①	0–400 Hz / 9999		9999	
	103	V/f2 frequency voltage ①	0–1000 V		0	
	104	V/f3 frequency ①	0–400 Hz / 9999		9999	
	105	V/f3 frequency voltage ①	0–1000 V		0	
	106	V/f4 frequency ①	0–400 Hz / 9999		9999	
	107	V/f4 frequency voltage ①	0–1000 V		0	
	108	V/f5 frequency ①	0–400 Hz / 9999		9999	
	109	V/f5 frequency voltage ①	0–1000 V		0	

Function	Parameter	Meaning	Setting range		Default setting	
			FR-A 540 EC	FR-A 540L-G EC	FR-A 540 EC	FR-A 540L-G EC
3rd parameter settings	110	3. acceleration / deceleration time	0–360 s / 0–3600 s / 9999		9999	
	111	3rd deceleration time	0–360 s / 0–3600 s / 9999		9999	
	112	3rd torque boost ①	0–30 % / 9999		9999	
	113	3rd V/F (base frequency) ①	0–400 Hz / 9999		9999	
	114	3rd stall prevention operation current	0–200 %		150 %	150 % (M = const.) 120 % (M ~ n²) ⑩
	115	3rd stall prevention operation frequency	0–400 Hz		0	
	116	3rd output frequency detection	0–400 Hz / 9999		9999	
Communications functions	117	Station number	0–31		0	
	118	Communication speed	48 / 96 / 192		192	
	119	Stop bit length/data length	0 / 1 data length 8; 10 / 11 data length 7		1	
	120	Parity check presence/absence	0 / 1 / 2		2	
	121	Number of communication retries	0–10 / 9999		1	
	122	Communication check time interval	0–999.8 s / 9999		9999	
	123	Wait time setting	0–150 ms / 9999		9999	
	124	CR / LF absence/presence selection	0 / 1 / 2		1	
PID control	128	PID action selection	10 / 11 / 20 / 21		10	
	129	PID proportional band	0.1–1000 % / 9999		100 %	
	130	PID integral time	0.1–3600 s / 9999		1 s	
	131	Upper limit for actual value	0–100 % / 9999		9999	
	132	Lower limit for actual value	0–100 % / 9999		9999	
	133	PID action set point via parameter	0–100 %		0 %	
	134	PID differential time	0,01–10,00 s / 9999		9999	
Commercial power supply switchover	135	Selection of outputs for switchover MCs	0 / 1		0	
	136	MC switchover interlock time	0–100 s		1 s	
	137	Start waiting time	0–100 s		0.5 s	
	138	Selection of MCs on alarm message	0 / 1		0	
	139	Response frequency of MCs	0–60 Hz / 9999		9999	
Backlash	140	Backlash acceleration stopping frequency ⑥	0–400 Hz		1 Hz	
	141	Backlash acceleration stopping time ⑥	0–360 s		0.5 s	
	142	Backlash deceleration stopping frequency ⑥	0–400 Hz		1 Hz	
	143	Backlash deceleration stopping time ⑥	0–360 s		0.5 s	
Display	144	Speed setting switchover	0 / 2 / 4 / 6 / 8 / 10 / 102 / 104 / 106 / 108 / 110		4	
	145	Language selection	0–7		1	
Auxiliary functions	148	Stall prevention level at 0 V input	0–200 %		150 %	150 % (M = const.) 120 % (M ~ n²) ⑩
	149	Stall prevention level at 10 V input	0–200 %		200 %	200 % (M = const.) 150 % (M ~ n²) ⑩
Current detection	150	Output current detection level	0–200 %		150 %	150 % (M = const.) 120 % (M ~ n²) ⑩
	151	Output current detection period	0–10 s		0	
	152	Zero current detection level	0–200 %		5 %	
	153	Zero current detection period	0–1 s		0.5 s	
Help functions	154	Voltage reduction selection during stall prevention operation	0 / 1		1	
	155	RT activated condition	0 / 10		0	
	156	Stall prevention operation selection	0–31 / 100 / 101		0	
	157	OL signal waiting time	0–25 s / 9999		0	
	158	AM terminal function selection	1–3 / 5–14 / 17 / 18 / 21		1	
Aux. function	160	User group read selection ⑦	0 / 1 / 10 / 11		0	

Function	Parameter	Meaning	Setting range		Default setting	
			FR-A 540 EC	FR-A 540L-G EC	FR-A 540 EC	FR-A 540L-G EC
Restart	162	Automatic restart after instantaneous failure selection	0 / 1 / 2		0	
	163	First cushion time for restart	0–20 s		0 s	
	164	First cushion voltage for restart	0–100 %		0 %	
	165	Restart stall prevention operation level	0–200 %		150 %	150 % (M = const.) 120 % (M ~ n^2) ⑩
Initial monitor	170	Watt-hour meter clear	0		0	
	171	Actual operationhour meter clear	0		0	
User functions	173	User group 1 registration	0–999		0	
	174	User group 1 deletion	0–999 / 9999		0	
	175	User group 2 registration	0–999		0	
	176	User group 2 deletion	0–999 / 9999		0	
Terminal function selection	180	RL terminal function selection	0–99 / 9999		0	
	181	RM terminal function selection	0–99 / 9999		1	
	182	RH terminal function selection	0–99 / 9999		2	
	183	RT terminal function selection	0–99 / 9999		3	
	184	AU terminal function selection	0–99 / 9999		4	
	185	JOG terminal function selection	0–99 / 9999		5	
	186	CS terminal function selection	0–99 / 9999		6	
	190	RUN terminal function selection	0–199 / 9999		0	
	191	SU terminal function selection	0–199 / 9999		1	
	192	IPF terminal function selection	0–199 / 9999		2	
	193	OL terminal function selection	0–199 / 9999		3	
	194	FU terminal function selection	0–199 / 9999		4	
	195	ABC terminal function selection	0–199 / 9999		99	
Auxiliary functions	199	User initial value setting	0–999 / 9999		0	
Program operations	200	Program minute/second selection	0 / 2: minute, second; 1 / 3 : hour, minute		0	
	201–230	Program set	0–2: direction of rotation; 0–400 / 9999: frequency; 0–99:59: time		0 / 9999 / 0	
	231	Time-of-day setting	0–99:59		0	
Multi-speed operations	232	Multi-speed setting (speed 8) ⑦	0–400 Hz, 9999		9999	
	233	Multi-speed setting (speed 9) ⑦	0–400 Hz, 9999		9999	
	234	Multi-speed setting (speed 10) ⑦	0–400 Hz, 9999		9999	
	235	Multi-speed setting (speed 11) ⑦	0–400 Hz, 9999		9999	
	236	Multi-speed setting (speed 12) ⑦	0–400 Hz, 9999		9999	
	237	Multi-speed setting (speed 13) ⑦	0–400 Hz, 9999		9999	
	238	Multi-speed setting (speed 14) ⑦	0–400 Hz, 9999		9999	
	239	Multi-speed setting (speed 15) ⑦	0–400 Hz, 9999		9999	
Auxiliary functions	240	Soft-PWM setting	0 / 1		1	
	244	Cooling fan operation selection	0 / 1		0	
Stop functions	250	Stop selection time	0–100 s / 9999		9999	
Supplementary functions	251	Output phase failure	0 / 1		1	
	252	Gain overlay for setting voltage	0–200 %		50 %	
	253	Offset overlay for setting voltage	0–200 %		150 %	
Power failure stop functions	261	Power failure stop selection	0 / 1		0	
	262	Subtraction frequency at deceleration start	0–20 Hz		3 Hz	
	263	Subtraction starting frequency	0–120 Hz / 9999		50 Hz	
	264	Power failure deceleration time 1	0–3600 s		5 s	
	265	Power failure deceleration time 2	0–3600 / 9999		9999	
	266	Power failure deceleration time switchover frequenc	0–400 Hz		50 Hz	
Function selection	270	Stop on contact/load high speed frequency control selection	0 / 1 / 2 / 3		0	

Function	Parameter	Meaning	Setting range		Default setting	
			FR-A 540 EC	FR-A 540L-G EC	FR-A 540 EC	FR-A 540L-G EC
Load torque high-speed frequency control	271	High speed setting maximum current ⑦	0–200 %		50 %	
	272	Medium speed setting minimum current ⑦	0–200 %		100 %	
	273	Current averaging range ⑦	0–400 Hz / 9999		9999	
	274	Current averaging filter time constant ⑦	1–4000		16	
Stop on contact control	275	Stop on contact exciting current low-speed multiplying factor	0–1000 % / 9999		9999 ④	
	276	Stop on contact PWM carrier frequency	0–15 / 9999	0 / 1 / 2 / 9999	9999 ④	
Brake sequence functions	278	Brake opening frequency ②	0–30 Hz		3 Hz	
	279	Brake opening current ②	0–200 %		130 %	
	280	Brake opening current detection time ②	0–2 s		0,3 s	
	281	Brake operation time at start ②	0–5 s		0,3 s	
	282	Brake closing frequency ②	0–30 Hz		6 Hz	
	283	Brake operation time at stop ②	0–5 s		0,3 s	
	284	Deceleration detection function selection ②	0 / 1		0	
	285	Over-speed detection function selection	0–30 Hz / 9999		9999	
	286	Droop gain	0 – 100 %		0 %	
	287	Droop filter constant	0.00 – 1.00 s		0.3 s	
Special functions	300 – 386 500 – 502	Parameters for inboard options (optional selectable if apropriate option board is installed)	Refer to the options instruction manual for further details.		Refer to the options instruction manual for further details.	
	342	E2PROM write selection	0 / 1		0	
	570	CT/VT selection (FR-A 540L-G only)	—	0 / 1 / 2 / 10	—	0
	571	Starting frequency holding time (FR-A 540L-G only)	—	0–10 s / 9999	—	9999
Calibration functions	900	FM terminal calibration	Calibration range		—	
	901	AM terminal calibration	Calibration range		—	
	902	Frequency setting voltage bias	0–60 Hz / [0–10 V]		0 Hz / [0 V]	
	903	Frequency setting voltage gain	1–400 Hz / [0–10 V]		50 Hz / [5 V]	
	904	Frequency setting current bias	0–60 Hz / [0–20 mA]		0 Hz / [4 mA]	
	905	Frequency setting current gain	1–400 Hz / [0–20 mA]		50 Hz / [20 mA]	
Auxiliary functions	990	Buzzer control for keyboard	0 / 1		1	
	991	Calibration for the LC display of the parameter unit	0–63		53	

Remarks on the table:

① The parameter setting is ignored, if the advanced flux vector control is activated.

② Can only be set, if parameters 80 and 81 do not equal 9999 and parameter 60 is set to the value 7 or 8.

③ Can only be accessed, if parameters 80 and 81 do not equal 9999 and parameter 270 is set to the value 801.

④ Can only be accessed, if parameters 80 and 81 do not equal 9999 and parameter 270 is set to the value 1 or 3.

⑤ The setting values depend on the corresponding capacity class of inverter.

⑥ Can only be accessed, if parameter 29 is set to the value 3.

⑦ Can even be set even if the inverter is running and if parameter 77 is set to the value 0.

⑧ The setting values depend on the corresponding capacity class of inverter. Sub-division of capacity classes: (0.4) / (1.5 – 3.7 k) / (5.5 k – 7.5 k) / (11 k)

⑨ The setting values depend on the corresponding capacity class of inverter. Sub-division of capacity classes: (0.4 – 1.5 k) / (2.2 – 7.5 k) / (≥11 k)

⑩ The setting depends on the value of parameter 570.

Protective Functions Overview

The inverter FR-A 540(L-G) EC provides a large number of protective functions that protect the drive and the inverter against damage in case of any malfunction.

If an error occurs, the output of the inverter is suspended and the control panel returns an error message.

Display on control panel FR-DU04	Meaning	Description	Remedy
E.OC1	Overcurrent 1 (acceleration)	A) The output current of the inverter has reached or exceeded 200 % of the rated current during acceleration, deceleration, or at constant speed. B) The temperature of the main circuits of the inverter rises rapidly.	The cause for the activation of the protective function is a short circuit or a ground fault across the main outputs, an exceeding moment of inertia of the load (GD^2), too short acceleration / deceleration time presets, restart during a motor idling phase, operation of a motor with an exceeding capacity. Overheating due to insufficient cooling (defective cooling fan or choked heat sink.
E.OC2	Overcurrent 2 (const. speed)		
E.OC3	Overcurrent 3 (deceleration)		
E.OV1	Overvoltage 1 (acceleration)	The converter voltage has increased highly due to regenerative energy. The overvoltage limit was exceeded during acceleration, deceleration, or at constant speed.	In most cases the protective function is activated due to a too short deceleration time preset or a regenerative overload. Remedy by increasing the deceleration time of connecting an external brake unit. An overvoltage in the mains power supply activates this protective function as well.
E.OV2	Overvoltage 2 (const. speed)		
E.OV3	Overvoltage 3 (deceleration)		
E.THM	Overload (motor)	The electronic overload protection for the motor or inverter was activated. The electronic motor protection switch continually detects the motor current and the output frequency of the inverter. If a self-cooling motor operates over a long period at low speed but high torque, the motor is thermally overloaded and the protective function is activated. If several motors are operated by one inverter the motor protection switch will not operate properly. In this case deactivate the motor protection and replace it by external protection switches.	Decrease the motor load to avoid an activation. Check whether the performance range of the motor and inverter correspond.
E.THT	Overload (inverter)		
E.IPF	Instantaneous power failure protection	The output of the inverter is suspended and the alarm message returned, if the power supply fails for more than 15 ms. If the power supply fails for more than 100 ms, the inverter shuts down completely. In this case after restoring the power supply the inverter is in the power ON state. If the power failure stays below 15 ms, the operation is proceeded normally.	Check the power supply.
E.UVT	Undervoltage	The input voltage of the inverter has fallen below the minimum value. The protective function is activated, if the input voltage falls below the minimum value.	An undervoltage can occur, if the capacity of the mains transformer is not sufficient or if a high capacity motor is turned ON connected to the same mains supply circuit.
E.FIN	Overheating of heat sink	In case of an overheating of the heat sink the temperature sensor responds and the inverter is stopped.	Check ambient temperature.
E.OSD ①	Excessive speed deviation detection	The motor speed is increased or decreased due to load, etc. during vector contol which is executed with the FR-A5AP option.	Check vor sudden load change.
E.ECT ①	Wire break detection	The encoder signal is turend off during orinetation, PLG feedback or vector contol which is executed with the FR-A5AP option.	Check for encoder signal wire break.
FN ①	Fan failure	The cooling fan does not operate according to the setting in parameter 244.	Replace cooling fan.
E.BE ①	Brake transistor failure	A) The integrated brake transistor does not operate properly. B) Possibly, a thermal overload occured.	Check the relative operating time of the brake resistor. In case of thermal difficulties use an external brake resistor or an inverter of higher capacity.
E.GF	Ground failure	An overcurrent occured due to a ground failure upon the inverter output (load).	Check load connections (motor circuit).
E.OHT	Activation of an external motor protection relay (thermal contact)	An external motor protective switch was activated. If an external motor protective switch for thermal monitoring is used, this switch can activate the protective function of the inverter.	Check motor load and drive.
E.OLT	Stall prevention overload	A long lasting excess of the current limit (OL display) shut down the inverter.	Reduce the load. Check the preset values for the current limit (parameter 22) and the stall prevention selection (parameter 156).
E.OPT	Error in an optional unit	A dedicated inboard option does not operate properly. The protective function is activated, if an internal option is improperly installed or connected.	Check connections and connectors of the optional unit.

Display on control panel FR-DU04	Meaning	Description	Remedy
E.OP1 to E.OP3	Option slot alarm	The protective function is activated for a fault (e.g. transmission error) of an internal optional unit.	Check the function settings of the optional unit.
E.PE	Memory error	Error on access of the data memory of the inverter.	Please contact your nearest MITSUBISHI ELECTRIC representative if the error occurs repeatedly.
E.PUE	Control panel connection error	A connection error between inverter and control panel occurred during operation. This alarm is only returned, if parameter 75 is set to "2", "3", "16", or "17".	Check the connection of control panel.
E.RET	Automatic restart retry exceeded	After activation of a protective function the inverter failed to be restarted automatically within the number of retries specified in parameter 67.	Remedy the actual cause of the originary protective function.
E.CPU	CPU error	Scan time of CPU was exceeded.	Restart the inverter. Contact the customer service if the error occurs again.
E. 1 to E. 3	Option fault	The inverter output is stopped if a contact fault occurs at the connector between the inverter and the communication option, or if a fault of the communication option itself, etc. occures	Check the installation and all connections of the option board. Contact the customer service if the error occurs again.
E. 6	CPU error	Communication error with the built-in CPU.	Restart the inverter. Contact the customer service if the error occurs again.
E. 7			
E.LF	Open output phase protection	One of the phases (U, V, W) is not connected.	Check the connections.
E.P24	24 V DC power output short circuit	The 24 V DC output at the PC terminal is short circuited.	Eliminate short circuit.
E.CTE	Short circuit in the control panel	The power supply of the control unit is short circuited.	Eliminate short circuit. Check the control panel and the connecting cable.
E.MB1 to E.MB7	Brake sequence error	This function stops the inverter output if a sequence error occurs during the use of the brake sequence function (Pr. 278 to Pr. 285)	Check the parameters 278 to 285.
PS	Inverter was stopped via control panel	STOP key on the control panel was pressed during external operating mode.	Check the parameter 77.
RB	Brake resistor overload	The brake resistor must exchange too much energy.	Increase the brake time.
TH	Load too large? Sudden acceleration?	The load is too large or the operating speed too high.	Reduce the load or the operating speed.
OL	Motor run under overload? Sudden deceleration? oL: Overvoltage OL: Overcurrent	The load is too large or the brake frequency too high.	Reduce the load or the brake frequency.
Err	Error	CPU error	Please contact your nearest MITSUBISHI ELECTRIC representative if the error occurs repeatedly.
E. 14 ③	DC circuit short circuited	The inverter output is stopped after a short circuit occured	Remove the short circuit and replace the DC fuse.
E.15 ②	Main circuit failure	The heat sink of brake unit is overheated	Reduce the load moment or brake frequency; clean the heat sink; replace the cooling fan
		DC fuse is blown	Eliminate the short-circuit and replace the fuse
		The control board is overheated	Replace the cooling fan; check the ambient temperature
		An overcurrent on the output has occured	Eliminate the short-circut or short to ground; replace the motor; increase the brake time; reduce the load fluctuations, increase the acceleration time; check the brake operation
		Power supply for cooling fan fails	Eliminate the short-circuit; replace the power supply for cooling fan; replace the fuse
		General overcurrent	Eliminate the short-circuit and replace the fuse; eliminate the short-circuit on output or short to ground; replace the motor and reduce the load
		The heat sink is overheated	Clean or replace the heat sink; check the ambient temperature
		A gate power supply failure has occured	Eliminate the short-circuit; replace the gate power supply

① These error messages are valid only for FR-A 540-0,4k bis -55k EC inverters.

② These error messages are valid only for FR-A 540L-G75k bis -280k EC inverters.

③ These error messages are valid only for FR-A 540L-G375k and -450k EC inverters.

④ These error messages are valid only for FR-A 540L-G75k bis -450k EC inverters.

Resetting Methodes

When a protective function is activated, the output of the inverter is switched off. The motor coasts to a halt. The output remains switched off until the error cause is eliminated and the inverter reset.
The inverter can be reset following three different methods:

- Switch the power supply OFF and ON again.
- Switch the reset signal ON for at least 0.1 s.
- Press the RESET key on the control panel.

If the reset signal is ON continuously, the control panel FR-DU04 returns an error message while the control unit FR-PU04 indicates that the reset procedure is in progress.

When a protective function is activated, the control panel FR-DU04 returns an error code as listed in the table above. The control panel FR-PU04 returns error messages in clear.

If on occurrence of an error the input protection contactor is toggled the error message cannot be retained, since there is no power supply for the control circuit.
If the error message is intended to be retained in spite of an activation of the protectve contactor, the control circuit has to be supplied by a separate power supply.

Separate power supply for the control circuit

The figure shows the connection of the separate 380-480 V AC (-15%/+10%) power supply for the control circuit. The current consumption is 2 A.

Prior to the connection remove the two short bars upon L1-L11 and L2-L21 on the inverters FR-A540 EC 0.4 k through 3.7 k and the short bars L11 and L21 on the inverters FR-A 540 EC 5.5 k through 55 k and FR-A 540L-G EC.

Please refer to the according manual for a precise description of the connection.

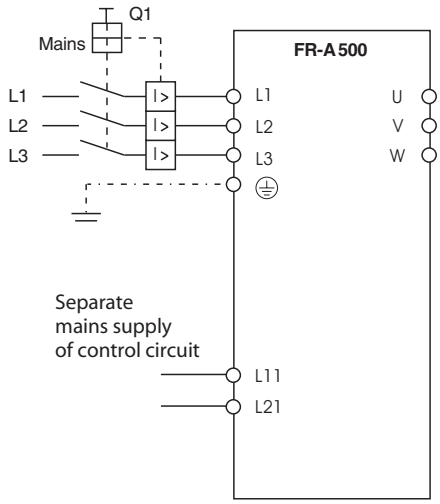

Sample Applications

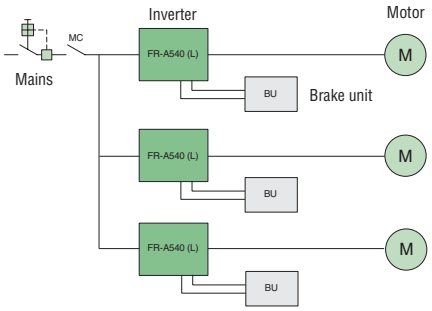

High-speed crane or lift

- The wide-range speed control facilitates high-speed control combined with high precision.
- A brake unit is not required because a power regenerating function is provided.
- Since this application comprises vertical and horizontal movements simultaneously the capacity class of the inverter results from the total capacity of both motors.
- The power supply for the mechanical brake is to be connected to the power supply for the converter.
- The mechanical brakes can be applied with optimal timing using the brake sequence function specified via parameters.
- The large starting torque allows powerful performance in lifting operations.

Air-conditioning fan

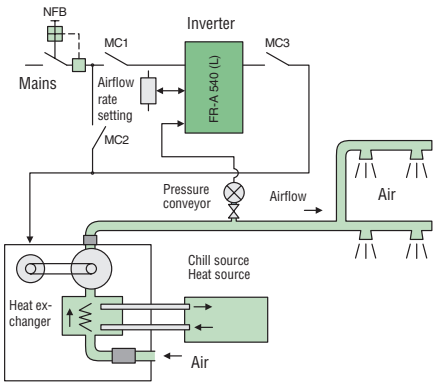

- Due to the integrated PID control function the inverter is suitable for constant temperature control functions.
- The timing of the contactors MC1–MC3 is controlled precisely through parameter settings.
- An electromechanical interlock that prevents MC2 and MC3 from being switched ON simultaneously is required.

The inverter controls temperature constantly during operation, creating a pleasant environment and saving energy.

Extruder

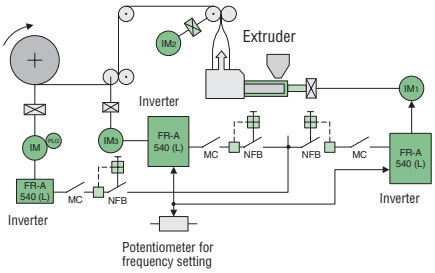

- The speed of the motor for the extruder and the motor for the pull-off rollers is set via a potentiometer. The different frequencies of the inverters can be adjusted via bias and gain (PR. 902 and PR. 903) of the input frequency signal.
- The advanced flux vector control with online auto tuning of the motor operating data enables the operation with minimum speed fluctuations. Thus, the pressure of the extruder can be adopted to different materials.

Using a PLG on the wind-up motor allows an even more precise control of operations.

Wire drawing mill

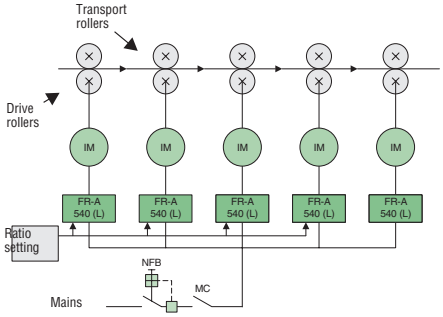

- The advanced flux vector control provides high-precision control of individual motors within a production line. Each successive motor is operated at a slightly higher speed.
- The speed of the latter motors must be proportional to the elongation rate resulting from the reduced cross-section of the wire.
- When the online auto tuning function is selected, the motor constants are automatically tuned each time the motor starts, eliminating speed variations caused by temperature fluctuations and providing stable control.

Overview of Internal and External Options

A large number of options allows an individual adoption of the inverter to the according task. The options can be installed quickly and easily. Detailed information on installation and functions is included in the manual of the options.

The options can be divided into two major categories:

- internal options
- external options

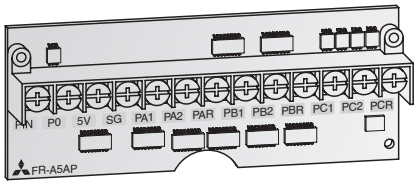

Internal options

The internal options comprise input and output extensions as well as communications options supporting the operation of the inverter within a network or connected to a personal computer or PLC.
The optional connection of a PLG supports a position control and via a feedback loop a precise speed control.

Option			Type	Description	Remarks / specifications	Art. no.
Internal options	12-bit digital input		FR-A5AX	Interface for the input of the frequency setting via 3-digit BCD or 12-bit binary code, setting of gain and bias supported.	Input: 24 V DC; 5 mA; open collector or switching signal, sink or source logic	68039
	Digital output		FR-A5AY	Selectable 7 of 27 standard output signals of the inverter can be output at the open collector.	Output load: 24V DC; 0,1 A, sink or source logic	68040
	Expansion analog output			Selectable 2 of 16 additional signals (e.g. output frequency, output voltage, output current) can be output and indicated at the FM / AM output. Display on measuring gauge: 20 mA DC or 5 V (10 V) DC	Output: max. 0 – 10 V DC; 0 – 20 mA; Resolution: 3 mV at voltage output, 1 µA at current output, accuracy: ±10 %	
	Relay output		FR-A5AR	Selectable 3 of 27 standard output signals of the inverter can be output through relay terminals.	Switching load: 230 V AC/0.3 A, 30 V DC/0.3 A	68038
	Encoder feedback (PLG) main axis orientation / position control		FR-A5AP	This option is used in combination with a pulse encoder for the position control. The motor speed is detected by a pulse encoder and is fed back for a precise speed control at variable load. The current position of drive shaft and the current motor speed can be displayed on the control panel.	Terminal for 3-phase asynchronous motors (2 – 8 poles) PLG with differential output (5 V DC)	68037
	Pulse train input			The speed can be entered in the inverter via pulse train signals	Input: 24 V DC; 10 mA; open collector, max. 100.000 pulses/s	
	PTC monitor		OI-FR-APTC	The PTC board is a device that is capable to give an overtemperature alarm by detecting the ohmic value of one PTC resistance.	Connection of PTC resistors series KTY	147224
	Communications	Computer link	FR-A5NR	Via this additional RS422 or RS485 compatible interface the operation, display functions, and parameter settings can be controlled by a computer (PC etc.). For minimum noise use twisted pair cables for the connection.	EIA RS485 and RS422, Multi-Drop operation, max. 19.200 Baud; max. 500 m, connection of up to 32 inverters supported	68046
		Profibus/DP	FR-A5NPA	Option board for the integration of a frequency inverter into a Profibus/DP network. The operation, display functions, and parameter settings can be controlled by a computer (PC etc.) or a PLC.	Connection of up to 126 inverters supported. Maximum transfer rate: 12 MBaud	141680
		DeviceNet ™	FR-A5ND	Option board for the integration of a frequency inverter into a DeviceNet. The operation, display functions, and parameter settings can be controlled by a computer (PC etc.) or a PLC.	Maximum transfer rate: 10 MBaud	68043
		CC-Link	FR-A5NC	Option board for the integration of a frequency inverter into a CC-Link network. The operation, display functions, and parameter settings can be controlled by a PLC.	Maximum transfer distance: 1200 m (at 156 x 10 kBaud)	68042
		Modbus Plus	FR-A5NM	The operation, display functions, and parameter settings can be controlled by a computer (PC etc.) or a PLC.	Maximum transfer distance: 100 m (at 10 kBaud)	68044
		CANopen	OI-FR-A5NCO	Option board for the integration of a frequency inverter into a CANopen network. The operation, display functions, and parameter settings can be controlled by a computer (PC etc.) or a PLC.	Maximum transfer rate: 1 MBaud	139377
Accessories	PCMCIA communications card		SioCard	Connection between mobile PC (PCMCIA) and frequency inverter RS485 (RJ45); no external power supply neccessary	Length 3 m; for parametrization and programming of the frequency inverter; it can be used for example with the VFD setup software	69946
	Conection cable		SC-FR PC	Connection between PC (RS232) and frequency inverte RS485 (RJ45); no external power supply neccessary		88426

External options

Besides the control panel FR-PU04 that provides an interactive control of the inverter the external options comprise noise filters complying with the EMC directives, power chokes improving the efficiency as well as brake units and brake resistors.

Option			Type	Description	Remarks/Specifications	Art. no.
External options	Control panel (8 languages)		FR-PU04	Interactive control panel with LCD display.	Refer to p.13 for detailed description	67735
	Connecting cable for control panel		FR-A5 CBL	Cable for a remote connection of the control panel FR-DU04 or FR-PU04.	Available length: 1; 2.5 and 5 m	1 m: 70727 2.5 m: 70728 5 m: 70729
	Connection cable		SC-FR PC	Communications cable for RS232 or RS485 interface to connect an external personal computer	Length 3 m; can be used for example with the VFD setup software	88426
	VFD setup software		FR-SW0-SETUP-W□	Parameterization and setup software for the whole FR-A 500 series	English / German	149718
	EMC noise filter	FR-A 540	FFR-□□□	Noise filter for compliance with EMC directives.	Refer to p.27 for detailed description	see p. 27
		FR-A 540L-G	FN 3359-□□□			
	External brake resistor	FR-A 540 0.4 k bis 7.5 k	FR-ABR-H RUFC	The connection of an external brake resistor improves the brake capacity of the inverter (only for inverters of capacity classes 0.4 to 7.5 k).	Refer to p.30 for detailed description	see p. 30
		FR-A 540L-G	MT-BR 5	To improve the brake capacity of the inverter; is used in combination with a brake unit		
	DC converter circuit choke coil	FR-A 540	FR-BEL-(H) □□	For an increased efficiency and compensation of voltage fluctuations.		on request
		FR-A 540L-G	MT-BEL ①			
	Mains circuit choke coil	FR-A 540	FR-BAL-(B) □□	For an increased efficiency and compensation of voltage fluctuations.	Refer to p.28 for detailed description	see p. 28
		FR-A 540L-G	—			
	Brake units	FR-A 540	BU-H15k BU-H30k BU-UFS22 BU-UFS40	For an improvement of the brake capacity. For loads with high moment of inertia or negative loads. Used in combination with a resistor unit.	Refer to p.29 for detailed description	see p. 29
		FR-A 540L-G	MT-BU 5 BU-UFS110			

① The DC converter circuit choke coil is standard equipment of the FR-A 540L-G type inverters. This choke coil is required for the operation of the inverter.

Mounting examples for internal and external options

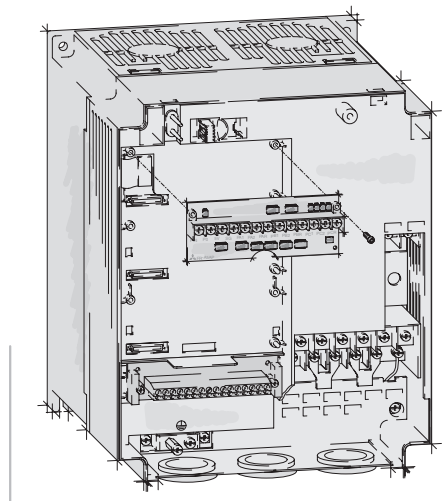

Mounting an option card to the FR-A 540 EC

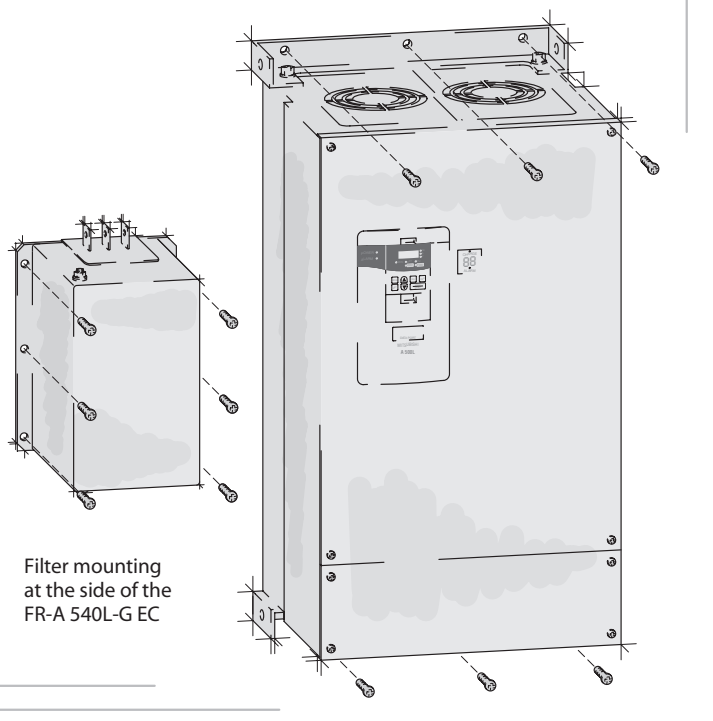

Filter mounting at the side of the FR-A 540L-G EC

Noise Filters for FR-A 540 / 520

Noise filters

For the compliance of the FR-A 500 series with the EMC directives of the European Community regarding the electromagnetic compatibility, the inverter has to be equipped with a noise filter across the input circuit and has to be installed and wired according to the EMC directives. In order to ensure a proper and safe operation of the componentry follow the points below:

- Ground the filter prior to applying the power supply.
- For the selection of a ground fault protective switch or relay take the leakage current of the filter into account.
- Ensure a perfect grounding of the filter, if you do not intend to use a protective switch or relay across the input circuit.

Filter	Inverter		Power loss [W]	Class	Leakage current [mA]	Weight [kg]	Art. no.
	FR-A540 EC	FR-A 520					
FFR-A540-8A-SF100	0.4 k–1.5 k	0.4 k/0.75 k	5	A + B*	< 30	1.5	104741
FFR-A540-16A-SF100	2.2 k/3.7 k	1.5 k/ 2.2 k	8	A + B*	<30	1.5	104752
FFR-A540-30A-SF100	5.5 k/7.5 k	3.7 k	14	A + B*	< 30	1.8	104753
FFR-A540-50A-SF100	11 k/15 k	5.5 k	25	A + B*	< 30	3.5	104754
FFR-A540-75A-SF100	18.5 k/22 k	7.5 k/11 k	34	A + B*	< 35	4.1	104755
FFR-A540-95A-SF100	30 k	15 k	36	A + B*	< 35	6.7	104756
FFR-A540-120A-SF100	37 k	18.5 k	34	A + B*	< 35	9.7	151881
FFR-A540-180A-SF100	45 k–55 k	22 k–30 k	62	A + B*	< 35	10.8	104757

* These filters meet the requirements of EN55011A for a motor cable length of 100 m and of EN55022B for a motor cable length of 20 m.

Noise Filters FR-A 540L-G / FR-A 520

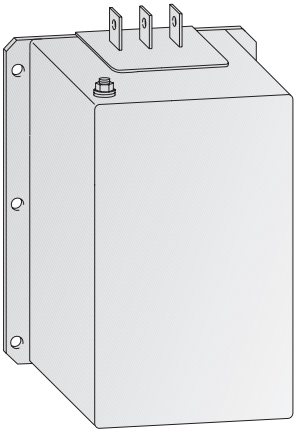

Noise filters for high capacities

The extremely compact line of FN 3359 filters provides the user with an efficient noise suppression at low room requirements.

The FN 3359 filters are suitable for a noise suppression meeting EN 55011.

For a cable length of up to 100 m (shielded) the compliance with class A is possible.

Filter	Inverter		Power loss [W]	Class	Leakage current [mA]	Weight [kg]	Art. no.
	FR-A 540L-G EC	FR-A 520					
FN 3359/180/99	75 k	37 k	34	A	< 6	7	141097
FN 3359/250/99	90 k	45 k	38	A	< 6	7	104663
FN 3359/400/99	110 k–132 k	55 k	51	A	< 6	10.5	104664
FN 3359/600/99	160 k/220 k	—	65	A	< 6	11	104665
FN 3359/1000/99	280 k/375 k	—	84	A	< 6	18	104666
FN 3359/1600/99	450 k	—	130	A	< 6	24	130229

■ Power Chokes for Three-Phase Current FR-BAL-B-□□k

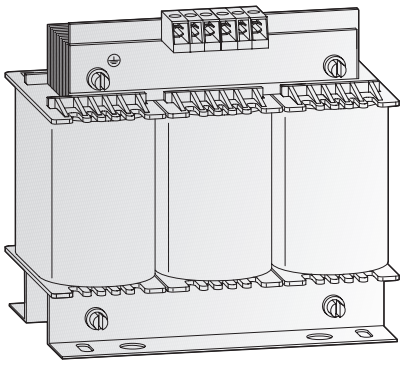

Three-phase mains supply chokes

The three-phase mains supply chokes FR-BAL-B-□□k for the frequency inverters FR-A 540 EC compensate voltage fluctuations and simultaneously increase the efficiency.

Applying the appropriate power choke an overall efficiency of up to 90 % can be achieved.

The use of a power choke is especially recommended for mains circuits where high capacities are switched, for example, via thyristors.

Inverter	Choke	Power capacity	L [mH]	Current [A]	Power loss [W]	Insolation class	Weight [kg]	Art. no.
FR-A 540	FR-BAL-B-4.0 k	FR-A 540-0.4 k–3.7 k	2.340	12	31	T40/E	3.0	87244
	FR-BAL-B-5.5k	FR-A 540-5.5 k	1.750	16	44	T40/E	3.7	87245
	FR-BAL-B-7.5 k	FR-A 540-7.5 k	1.220	23	59	T40/E	5.5	87246
	FR-BAL-B-11k	FR-A 540-11 k	0.667	42	68	T40/B	10.7	71053
	FR-BAL-B-15k	FR-A 540-15 k	0.667	42	68	T40/B	10.7	71053
	FR-BAL-B-22 k	FR-A 540-18.5 k/22 k	0.483	58	77	T40/B	11.2	87247
	FR-BAL-B-30 k	FR-A 540-30 k	0.369	76	86	T40/B	11.6	87248
	FR-BAL-B-37 k	FR-A 540-37 k	0.295	95	113	T40/B	18.6	87249
	FR-BAL-B-45 k	FR-A 540-45 k	0.244	115	118	T40/B	21.4	71054
	FR-BAL-B-55 k	FR-A 540-55 k	0.191	147	120	T40/F	22.6	87250

■ DC Reactor for FR-A540L-G

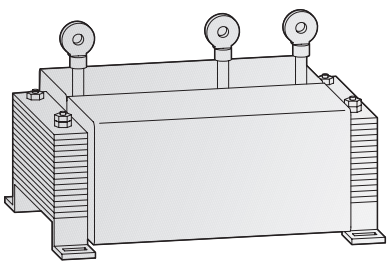

DC Link Reactors

A DC link reactor is included as standard equipment with the FR-A540L-G frequency inverters. This reactor is essential for the operation of the inverter and must be installed.

The function of these reactors corresponds to that of the three-phase mains supply chokes described above.

Application (inverter)	Power loss [W] at 120 %*	Power loss [W] at 150 %*	Power loss [W] at 200 %*	Weight [kg]	Art. no.
FR-A 540L-G 75 k	166	166	125	19	A DC link reactor is included as standard equipment with the respective frequency inverter.
FR-A 540L-G 90 k	202	192	144	20	
FR-A 540L-G 110 k	210	202	150	22	
FR-A 540L-G 132 k	253	214	168	29	
FR-A 540L-G 160 k	260	253	202	36	
FR-A 540L-G 220 k	290	276	239	48	
FR-A 540L-G 280 k	396	372	306	57	
FR-A 540L-G 375 k	530	450	375	100	
FR-A 540L-G 450 k	530	530	450	100	

*Overload capacity

Brake Units BU-UFS

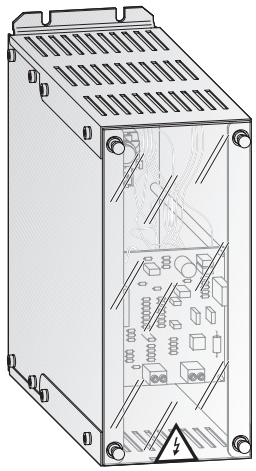

For a braking torque higher than 20 % or a duty cycle higher than 30 % an external brake unit including the adequate brake resistors has to be installed.

The brake units BU-UFS listed below are cascadable so that the optimum dimensioning can always be achieved.

Suggestions regarding an adequate dimensioning of brake resistors can be found in the operating manual for the brake unit. Like any other documentation of frequency inverters you will find the operating manual on the MITSUBISHI ELECTRIC homepage.

Inverter	Brake unit	Max. peak current [W]	Max. instantaneous power [kW]	Max. duty cycle [ED]	Art. no.
FR-A 540	BU-UFS22	34	25	10 %	127947
FR-A 540L-G	BU-UFS40	55	41	10 %	127948
FR-A 540L-G	BU-UFS110	140	105	5 %	127950

Brake Units BU and MT-BU

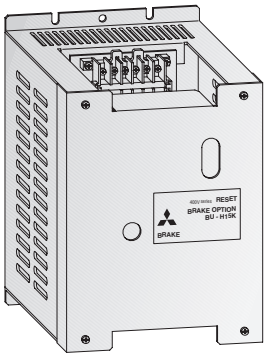

The inverters among the capacity range of 11 k to 55 k do not include an integrated brake unit. The capacitors in the converter circuit provide a braking torque of approx. 20 % of the rated motor torque (with the inverters from 11 k). If a higher braking torque or for the inverters 0.4 k to 7.5 k a greater duty cycle than 30 % is required, an external brake unit is required.

Brake resistors are to be provided application related. Regarding the selection of a suitable brake resistor you should contact MITSUBISHI ELECTRIC. The brake unit and brake resistor are connected according to the connecting diagram below. Prior to the connection of an external brake unit to the inverters 0.4 k to 7.5 k the short bar across terminals PR and PX has to be removed.

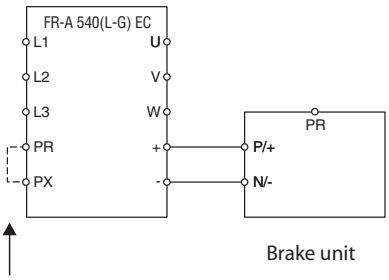

Remove short bar for inverters of the capacity ranges 0.4 to 7.5 k!

Inverter	Brake unit	Number of required units for inverter	Braking torque	Art. no.
FR-A 540	BU-H15k	1 x for 0.4 k–3.7 k; 2 x for 5.5 k–7.5 k	100 %, 30 s	3447
	BU-H30k	1 x for 11 k–15 k; 2 x for 18.5 k–22 k; 3 x for 37 k–45 k; 4 x for 55 k	100 %, 30 s	3446
FR-A 540L-G	MT-BU5-H75 k	1 x MT-BR5-H75 k	100 %, 10 % ED	125700
	MT-BU5-H150 k	2 x MT-BR5-H75 k	100 %, 10 % ED	125701
	MT-BU5-H220 k	3 x MT-BR5-H75 k	100 %, 10 % ED	125702
	MT-BU5-H280 k	4 x MT-BR5-H75 k	100 %, 10 % ED	125703
	MT-BU5-H375 k	5 x MT-BR5-H75 k	100 %, 10 % ED	125705

External Brake Resistor FR-ABR-H□□k and MT-BR

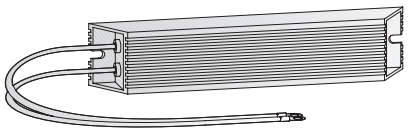

Among the capacity range of 0.4 k to 7.5 k the inverter is equipped with an internal brake chopper and brake resistor as standard. The internal brake resistor is limited to a brake duty of 2 % due to thermal reasons. A higher brake duty is achieved by the use of an external brake resistor with a higher rated capacity. The brake duty is selectable by parameter 70 and can be specified to up to 30 % via parameter 70.

The brake resistor MT-BR5 for the frequency inverter FR-A 540 L-G is used exclusively in combination with a brake unit (see page 29).

- Prior to the connection of the external brake resistor remove the short bar across terminals PR and PX, then connect it to terminals PR and +.
- The regenerative brake duty should be set at levels below the permissible brake duty specified in the table.
- Since the temperature of the brake resistor may exceed 300 °C take care to provide a sufficient heat dissipation.

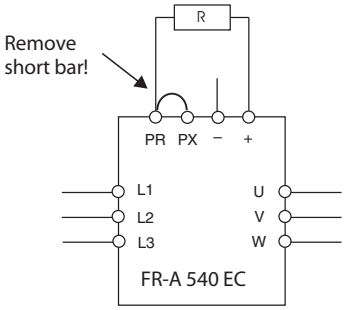

Brake resistor	Regenerative brake duty	Resistance [Ω]	Art. no.
FR-ABR-H0.4 k	10 %	1200	46601
FR-ABR-H0.75 k	10 %	700	46411
FR-ABR-H1.5 k	10 %	350	46603
FR-ABR-H2.2 k	10 %	250	46412
FR-ABR-H3.7 k	10 %	150	46413
FR-ABR-H5.5 k	10 %	110	50045
FR-ABR-H7.5 k	10 %	75	50049
MT-BR5-H75 k (FR-A 540 L only)	6 %	6.5	125699

Brake Resistor for Brake Unit BU-UFS

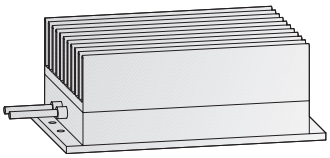

The brake resistors RUFC for the frequency inverters FR-A-540(L-G) EC are designed for the exclusive use in combination with a brake unit BU-UFS.

Please, note the specifications for the allowed duty cycle (ED max.) included in the instruction manual for the brake unit!

Type	Application	Regenerative brake duty	Resistance [Ω]	Capacity [W]	Art. no.
RUFC15	BU-UFS 15	10 %	1 x 40	1200	129628
RUFC22	BU-UFS 22	10 %	1 x 24	2000	129629
RUFC40 (Set)	BU-UFS 40	10 %	2 x 6,8	2000	129630
RUFC110 (Set)	BU-UFS 110	10 %	4 x 6,8	2000	129631

Control Panel FR-DU04

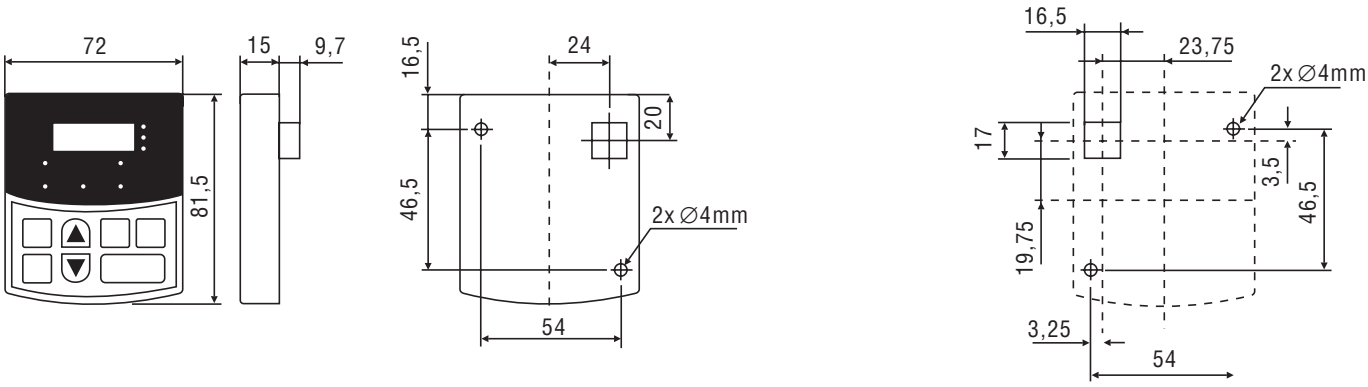

All dimensions in mm

Control Panel FR-PU04

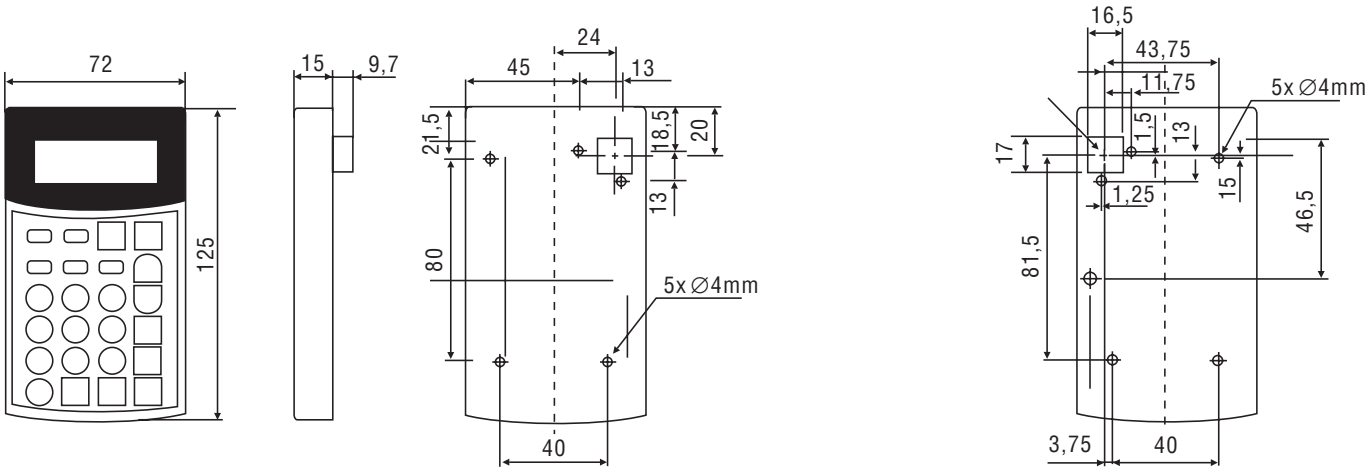

All dimensions in mm

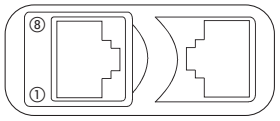

① SG ⑤ SDA
② P5S ⑥ RDB
③ RDA ⑦ SG
④ SDB ⑧ P5S

Connection of the control panel

The control panel can be attached on the inverter after removing the protective cover. The control panel can be connected to the inverter remotely via the connecting cable type FR-A5-CBL (1m; 2.5m; 5m). You must only use the original MITSUBISHI ELECTRIC cable. This cable is available as optional accessory. Plug the cable in the according connectors on the control panel and the inverter.

The figure besides shows the pin assignment of the connector plugs.

Never connect fax modems or modular telephone plugs with the connectors. Otherwise, the inverter might be damaged.

The connection of the control panel can be done with the communications cable SC-FR PC. A connection of the control panel to a personal computer is possible too.

FR-A 540 EC 0.4 k to 3.7 k

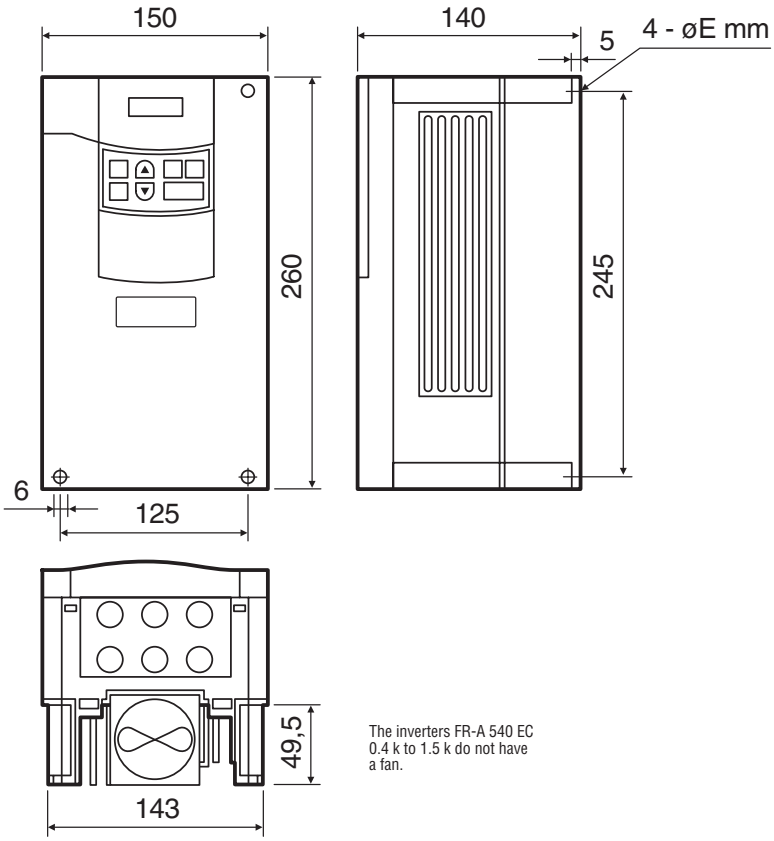

The inverters FR-A 540 EC 0.4 k to 1.5 k do not have a fan.

All dimensions in mm

FR-A 540 EC 5.5 k to 22 k

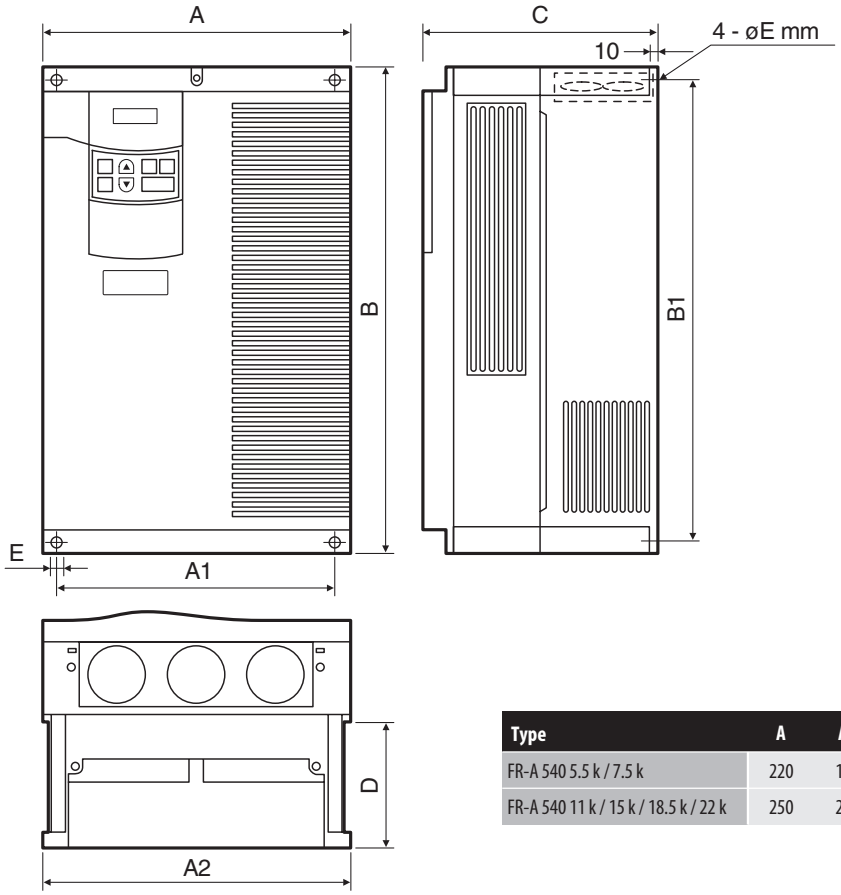

All dimensions in mm

Type	A	A1	A2	B	B1	C	D	E
FR-A 540 5.5 k / 7.5 k	220	195	211	260	245	170	86.5	6
FR-A 540 11 k / 15 k / 18.5 k / 22 k	250	230	242	400	380	190	101.5	10

FR-A 540 EC 30 k to 55 k

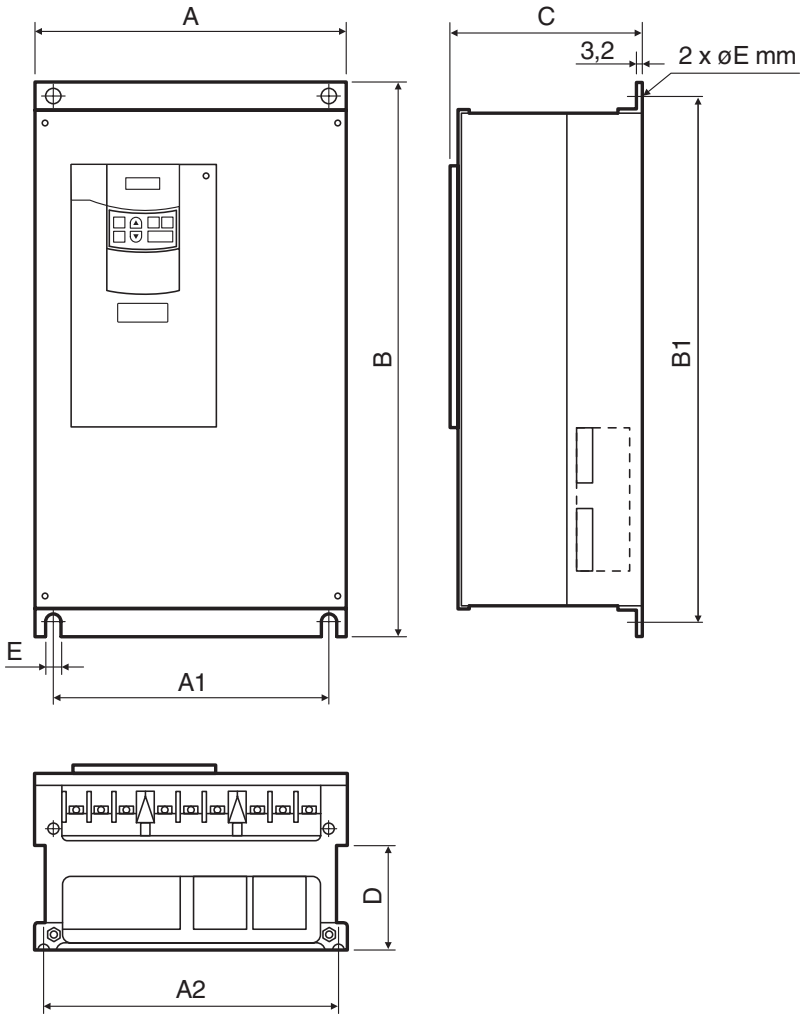

All dimensions in mm

Type	A	A1	A2	B	B1	C	D	E
FR-A 540 30 k	340	270	320	550	530	195	71.5	10
FR-A 540 37 k / 45 k / 55 k	450	380	430	550	525	250	154	12

FR-A 540L-G 75 k to 110 k

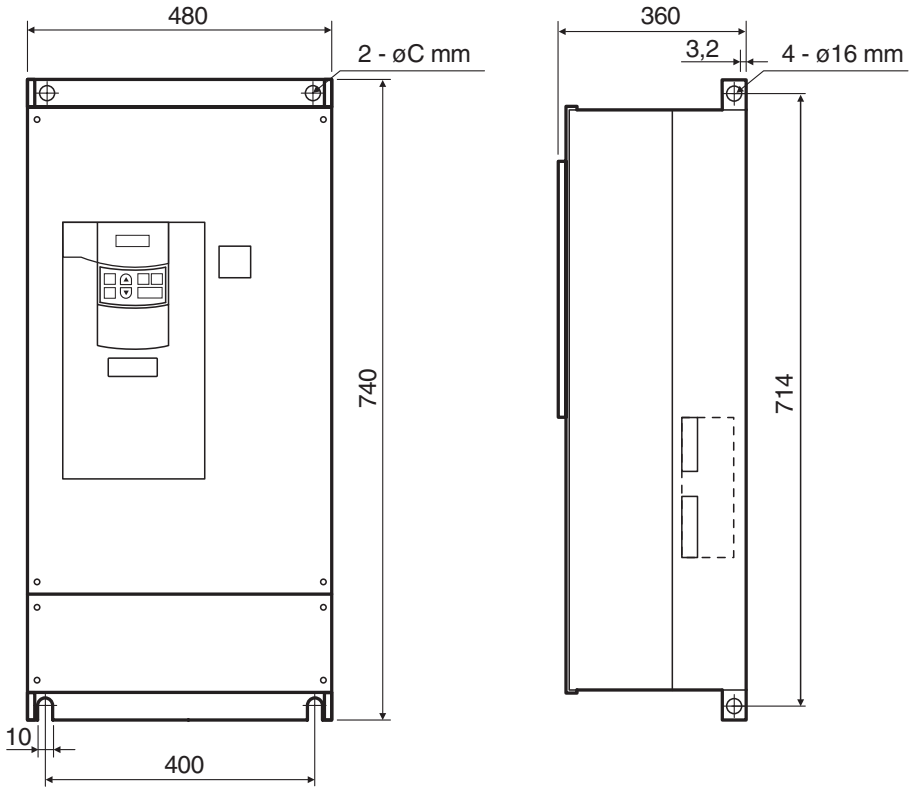

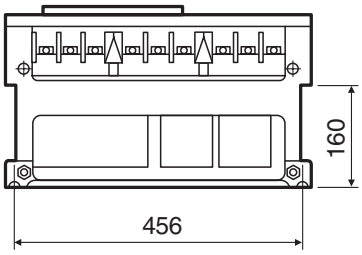

All dimensions in mm

FR-A 540L-G 132 k bis 280 k EC

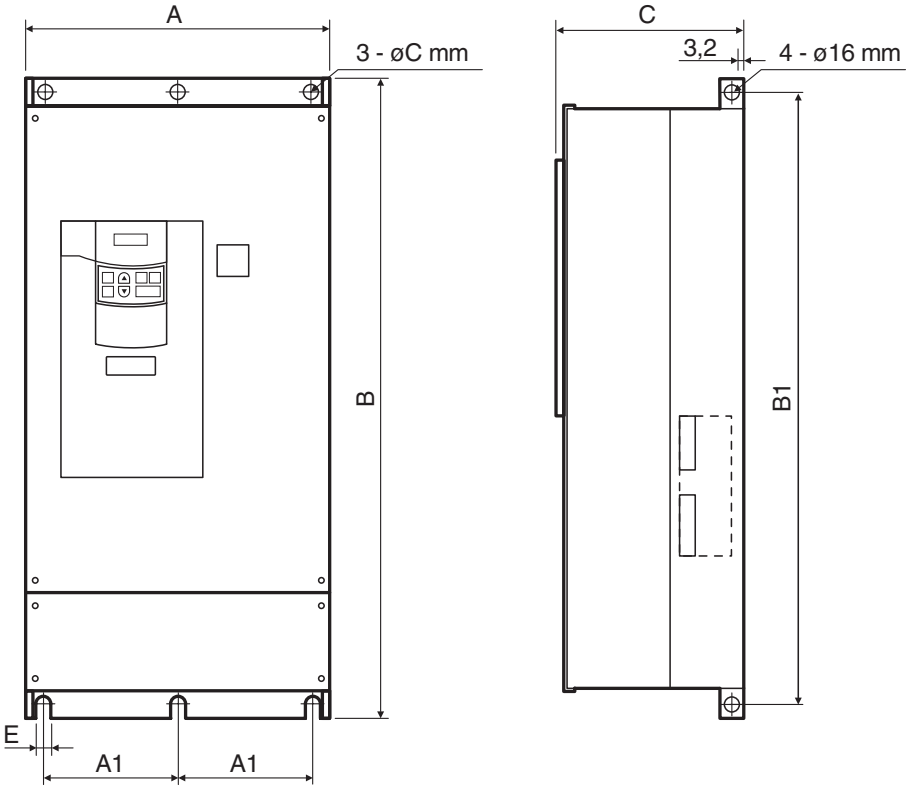

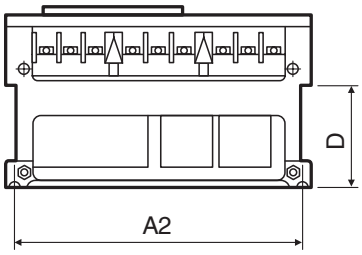

All dimensions in mm

Type	A	A1	A2	B	B1	C	D	E
FR-A 540L-G 132 k / 160 k	498	200	474	1010	984	380	185	10
FR-A 540L-G 220 k	680	300	656	1010	984	380	185	10
FR-A 540L-G 280 k	790	316	766	1330	1300	440	196	12

FR-A 540L-G 375 k and 450 k EC

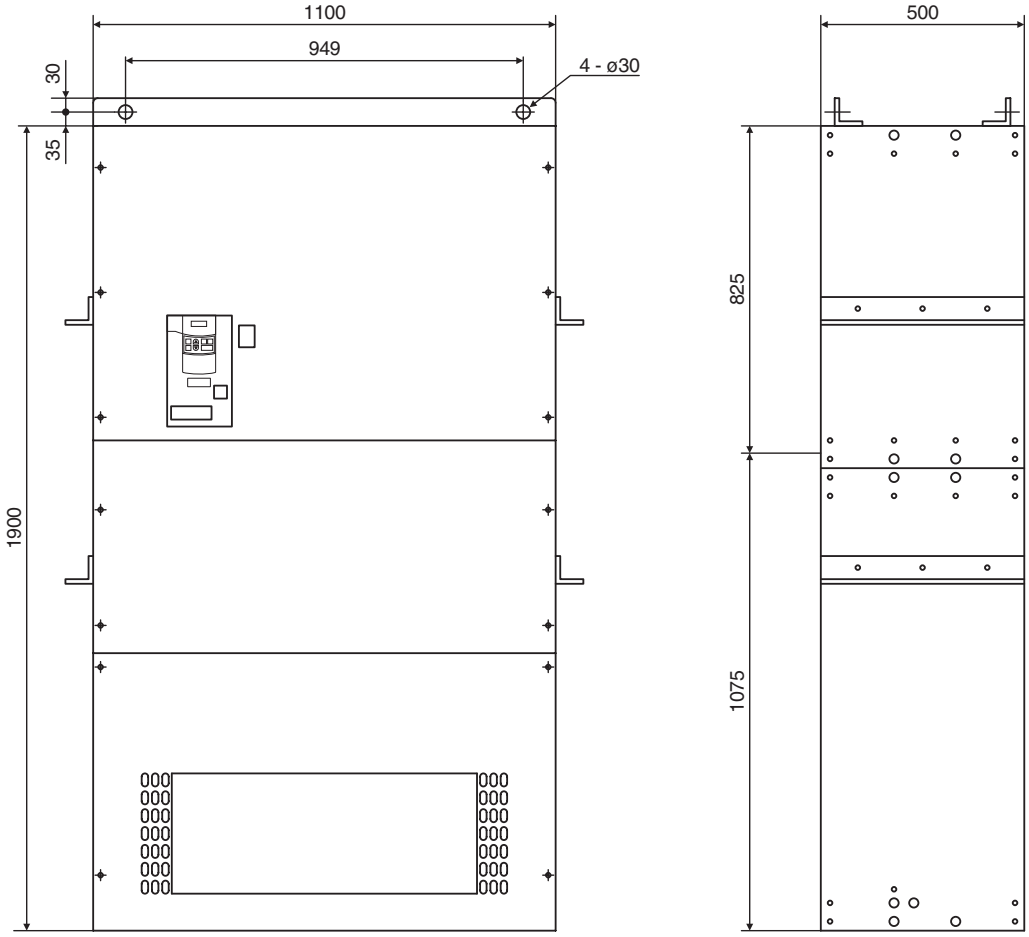

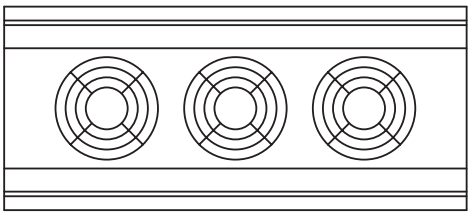

All dimensions in mm

Special Noise Filters for FR-A 540 EC / FR-A 520

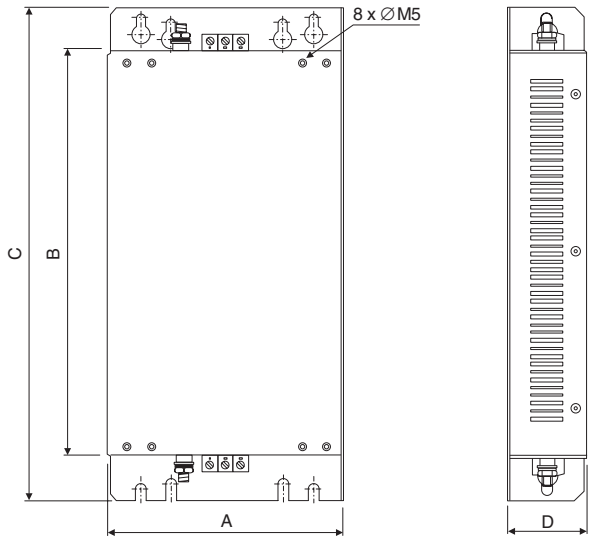

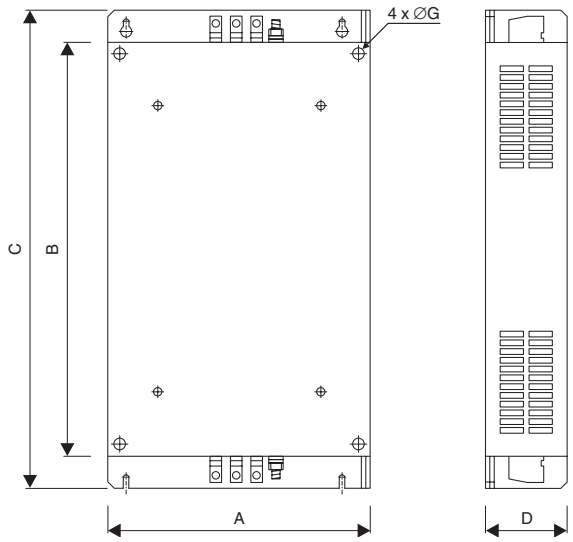

Filter	Inverter FR-A 540	Inverter FR-A 520	A	B	C	D	G	Weight [kg]
FFR-A540-8A-SF100	0.4 k–1.5 k	0.4 k/0.75 k	150	260	315	50	M5	1.5
FFR-A540-16A-SF100	2.2 k/3.7 k	1.5 k/2.2 k	150	260	315	50	M5	1.5
FFR-A540-30A-SF100	5.5 k–7.5 k	3.7 k	220	260	315	60	M5	3

All dimensions in mm

Filter	Inverter FR-A 540	Inverter FR-A 520	A	B	C	D	G	Weight [kg]
FFR-A540-50A-SF100	11 k–15 k	5.5 k	251.5	400	460	80	M5/M8	3.5
FFR-A540-75A-SF100	18.5 k/22 k	7.5 k/11 k	251.5	400	476	80	M5/M8	4.1
FFR-A540-95A-SF100	30 k	15 k	340	550	626	90	M8	6.7
FFR-A540-120A-SF100	37 k	18.5 k	450	550	636	120	M10	9.7
FFR-A540-180A-SF100	45 k–55 k	22 k–30 k	450	550	652	120	M10	10.8

All dimensions in mm

Noise Filters for FR-A 540L-G EC / FR-A 520

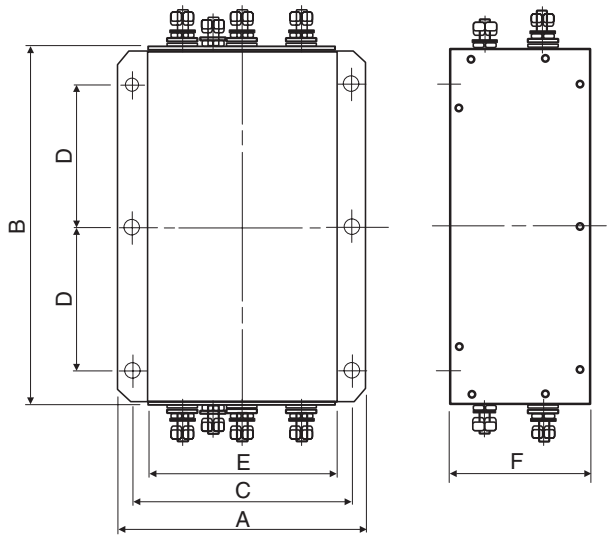

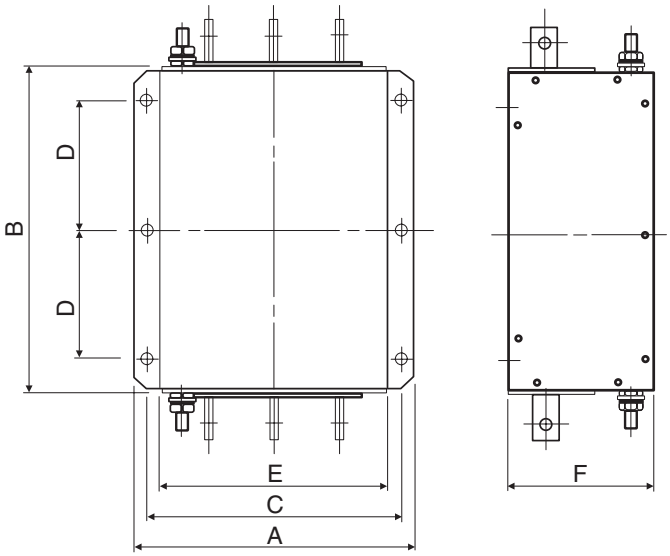

Filter	Inverter FR-A 540L-G	Inverter FR-A 520	A	B	C	D	E	F	Weight [kg]
FN 3359-180-28	75 k	37 k	210	300	185	120	160	120	6.5
FN 3359-250-28	90 k	45 k	230	300	205	120	180	125	7

All dimensions in mm

Filter	Inverter FR-A 540L-G	Inverter FR-A 520	A	B	C	D	E	F	Weight [kg]
FN 3359-400-99	110 k–132 k	55 k	260	306	235	120	210	115	10.5
FN 3359-600-99	160 k/220 k	—	260	306	235	120	210	135	11
FN 3359-1000-99	280 k/375 k	—	280	356	255	145	230	170	18
FN 3359-1600-99	450 k	—	300	406	275	170	250	160	27

All dimensions in mm

■ Power Chokes for Three-Phase Current FR-BAL-B-□□k

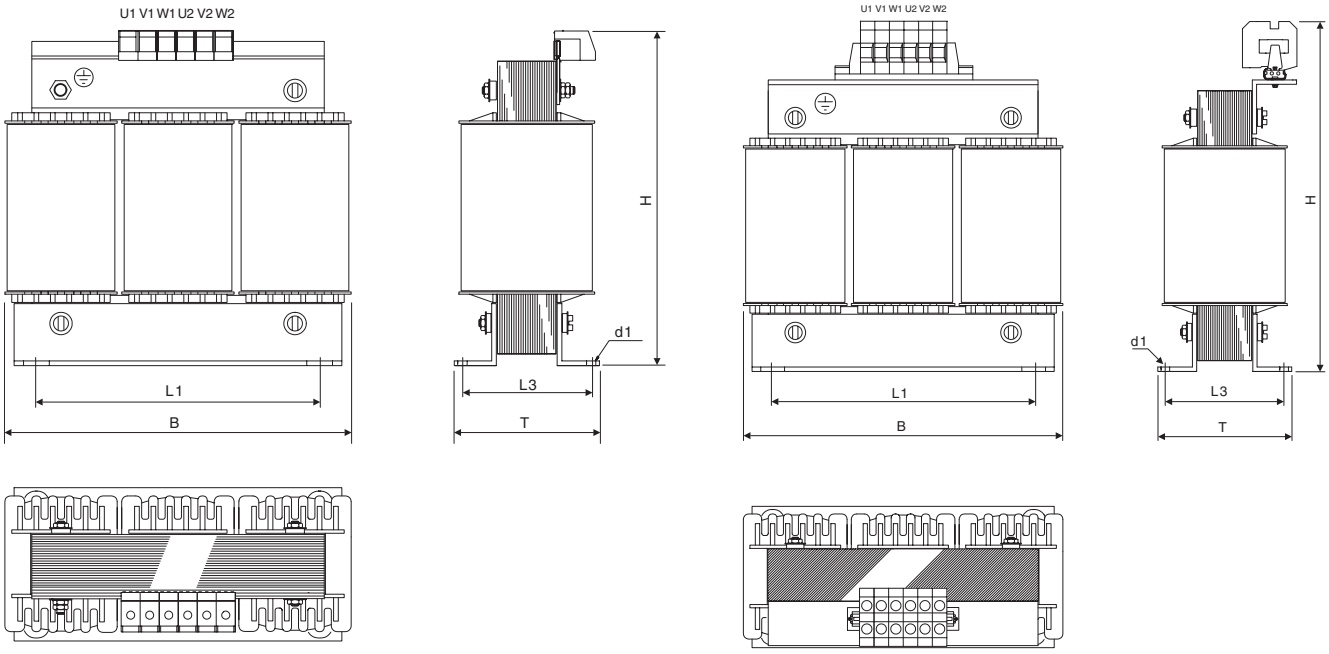

Choke	Inverter	B	T	H	L1	L3	d1	Weight [kg]
FR-BAL-B-4.0 k	FR-A 540-0.4 k–3.7 k	125	82	130	100	56	5 x 8	3.0
FR-BAL-B-5.5 k	FR-A 540-5.5 k	155	85	145	130	55	8 x 12	3.7
FR-BAL-B-11 k	FR-A 540-11 k	155	100	150	130	70	8 x 12	5.5
FR-BAL-B-15 k	FR-A 540-15 k	190	115	210	170	79	8 x 12	10.7
FR-BAL-B-22 k	FR-A 540-18.5 k/22 k	190	115	210	170	79	8 x 12	11.2

All dimensions in mm

Choke	Inverter	B	T	H	L1	L3	d1	Weight [kg]
FR-BAL-B-30 k	FR-A 540-30 k	190	118	230	170	79	8 x 12	3.0
FR-BAL-B-37 k	FR-A 540-37 k	210	128	265	175	97	8 x 12	3.7
FR-BAL-B-45 k	FR-A 540-45 k	230	165	280	180	122	8 x 12	5.5
FR-BAL-B-55 k	FR-A 540-55 k	240	140	305	190	97	11 x 12	10.7

All dimensions in mm

Converter Chokes for Frequency Inverters FR-A 540L-G 75 k–110 k

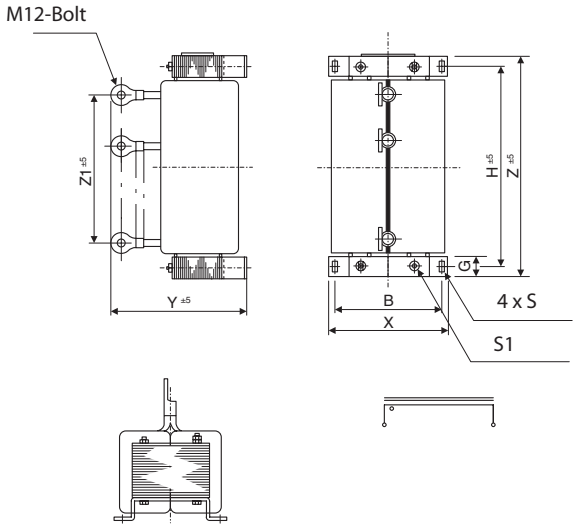

Inverter	X	Y	Z	Z1	B	H	G	S	S1	∅	Weight [kg]
FR-A 540L-G 75 k	140	170	320	230	130	295	25	M6	M6	M10	14
FR-A 540L-G 90 k	150	175	337	265	130	310	25	M6	M6	M12	18
FR-A 540L-G 110 k	150	180	337	255	130	310	25	M6	M6	M12	19

All dimensions in mm

Converter Chokes for Frequency Inverters FR-A 540L-G 132 k–220 k

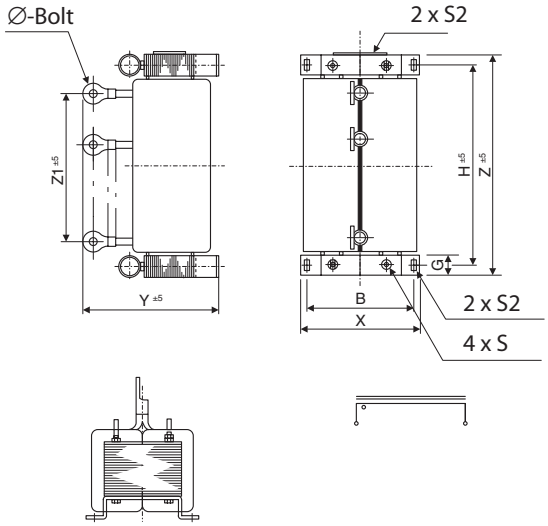

Inverter	X	Y	Z	Z1	B	H	G	S	S1	S2	∅	Weight [kg]
FR-A 540L-G 132 k	175	225	400	285	150	365	32	M8	M6	—	M12	29
FR-A 540L-G 160 k	190	225	438	305	165	400	38	M8	M8	M8	M12	36
FR-A 540L-G 220 k	210	235	495	350	185	450	44	M10	M8	M8	M12	48

All dimensions in mm

Converter Choke for Frequency Inverters FR-A 540L-G 280 k

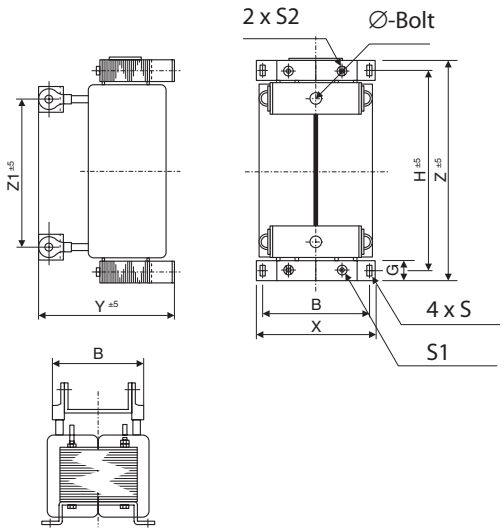

Inverter	X	Y	Z	Z1	B	H	G	S	S1	S2	∅	Weight [kg]
FR-A 540L-G 280 k	220	250	495	380	195	450	44	M10	M8	M8	M16	57

All dimensions in mm

Converter Choke for Frequency Inverters FR-A 540L-G 375 k und 450 k

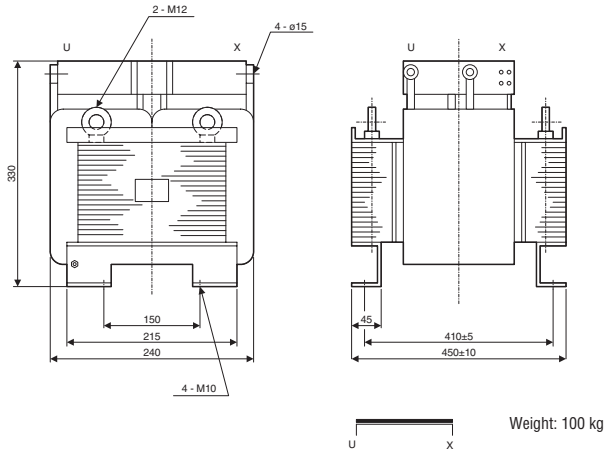

External Brake Resistor FR-ABR-H□□k

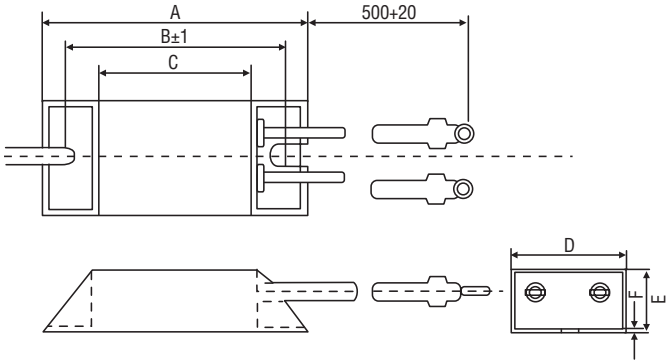

Brake resistor	A	B	C	D	E	F	Weight [kg]
FR-ABR-H0,4 k	115	100	75	40	20	2,5	0,2
FR-ABR-H0,75 k	140	125	100	40	20	2,5	0,2
FR-ABR-H1,5 k	215	200	175	40	20	2,5	0,4
FR-ABR-H2,2 k	240	225	200	50	25	2,0	0,5
FR-ABR-H3,7 k	215	200	175	60	30	2,5	0,8
FR-ABR-H5,5 k	335	320	2/95	60	30	2,5	1,3
FR-ABR-H7,5 k	400	385	360	80	40	2,5	2,2

All dimensions in mm

External Brake Resistor MT-BR5-H75 k

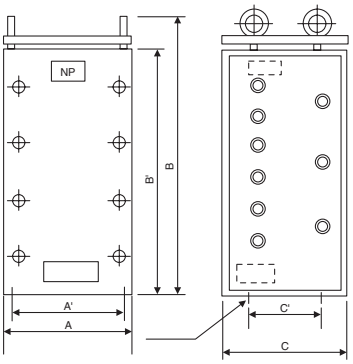

Brake resistor	A	A'	B	B'	C	C'	Weight[kg]
MT-BR5-H75 k	510	480	885	800	465	300	70

All dimensions in mm

External Brake Resistor RUFC

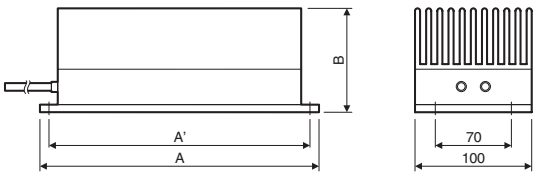

Brake resistor	A	A'	B	Weight[kg]
RUFC15	245	230	75	4,0
RUFC22	310	295	75	4,7
RUFC40	365	350	75	9,4
RUFC110	365	350	75	18,8

All dimensions in mm

Brake Unit BU-H

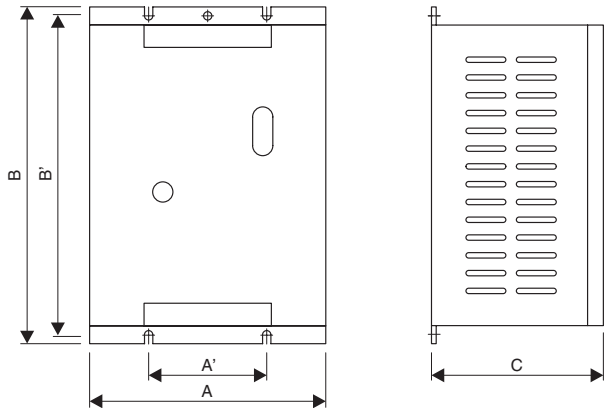

Brake unit	A	A'	B	B'	C	Weight[kg]
BU-H15 k	160	90	240	225	145	3,2
BU-H30 k	160	90	240	225	145	3,2

All dimensions in mm

Brake Unit BU-UFS

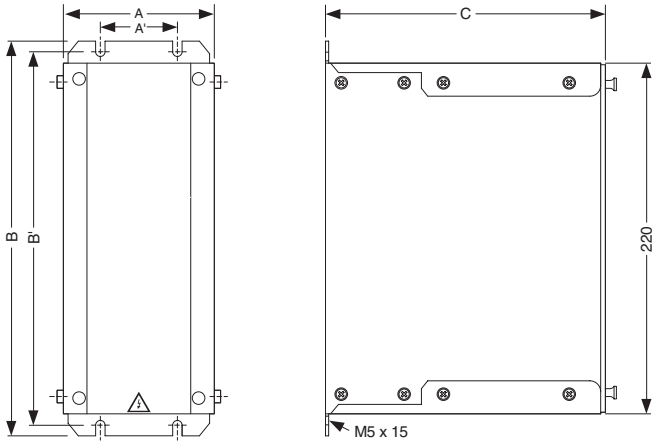

Brake unit	A	A'	B	B'	C	Weight[kg]
BU-UFS22	100	50	250	240	175	2,5
BU-UFS40	100	50	250	240	175	2,5
BU-UFS110	107	50	250	240	195	3,9

All dimensions in mm

Brake Unit MT-BU5

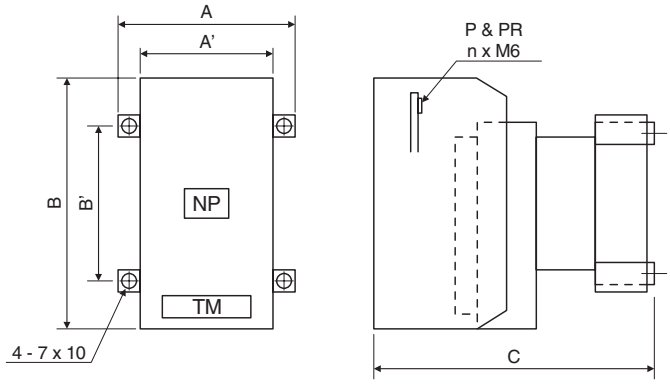

Brake unit	A	A'	B	B'	C	Weight[kg]
MT-BU5-H75K	118	90	200	100	256,5	1,5
MT-BU5-H150K	188	160	200	100	256,5	3,0
MT-BU5-H220K	258	230	200	100	256,5	4,5
MT-BU5-H280K	328	300	200	100	256,5	6,0
MT-BU5-H375K	398	370	200	100	256,5	7,5

All dimensions in mm

MITSUBISHI ELECTRIC EUROPE B.V.
Industrial Automation / German Branch
Gothaer-Str. 8
D-40880 Ratingen

Fax: +49 2102 486-7170

Company: . . . . . .
Department: . . . . . .
Street: . . . . . .
Address: . . . . . .
Phone: . . . . . .
Fax: . . . . . .

Order declaration

Pos.	Number	Item (type)	Article number	Description	Remarks

Notes when ordering:
When ordering, please use only the type designations and order numbers shown in this catalogue.

HEADQUARTERS

MITSUBISHI ELECTRIC EUROPE B.V. — **EUROPE**
German Branch
Gothaer Straße 8
D-40880 Ratingen
Phone: +49 (0) 21 02 / 486-0
Fax: +49 (0) 21 02 / 4 86-11 20
e mail: megfamail@meg.mee.com

MITSUBISHI ELECTRIC EUROPE B.V. — **FRANCE**
French Branch
25, Boulevard des Bouvets
F-92741 Nanterre Cedex
Phone: +33 1 55 68 55 68
Fax: +33 1 55 68 56 85
e mail: factory.automation@fra.mee.com

MITSUBISHI ELECTRIC . EUROPE B.V — **ITALY**
Italian Branch
Via Paracelso 12
I-20041 Agrate Brianza (MI)
Phone: +39 039 / 60 53 1
Fax: +39 039 / 60 53 312
e mail: factory.automation@it.mee.com

MITSUBISHI ELECTRIC EUROPE B.V. — **SPAIN**
Spanish Branch
Carretera de Rubí 76-80
E-08190 Sant Cugat del Vallés
Phone: +34 9 3 / 565 3131
Fax: +34 9 3 / 589 2948
e mail: industrial@sp.mee.com

MITSUBISHI ELECTRIC EUROPE B.V. — **UK**
UK Branch
Travellers Lane
GB-Hatfield Herts. AL10 8 XB
Phone: +44 (0) 1707 / 27 61 00
Fax: +44 (0) 1707 / 27 86 95

MITSUBISHI ELECTRIC CORPORATION — **JAPAN**
Office Tower "Z" 14 F
8-12,1 chome, Harumi Chuo-Ku
Tokyo 104-6212
Phone: +81 3 / 622 160 60
Fax: +81 3 / 622 160 75

MITSUBISHI ELECTRIC AUTOMATION — **USA**
500 Corporate Woods Parkway
Vernon Hills, IL 60061
Phone: +1 847 / 478 21 00
Fax: +1 847 / 478 22 83

EUROPEAN REPRESENTATIVES

GEVA — **AUSTRIA**
Wiener Straße 89
A-2500 Baden
Phone: +43 (0)2252 / 85 55 20
Fax: +43 (0)2252 / 488 60
e mail: office@geva.at

TEHNIKON — **BELARUS**
Oktjabrskaya 16/5, Ap 704
BY-220030 Minsk
Phone: +375 (0)17 / 2275704
Fax: +375 (0)17 / 2276669
e mail: tehnikon@belsonet.net

Getronics b.v. Control Systems — **BELGIUM**
Pontbeeklaan 43
B-1731 Asse-Zellik
Phone: +32 (0)2 / 467 17 51
Fax: +32 (0)2 / 467 17 45
e mail: infoautomation@getronics.com

TELECON CO. — **BULGARIA**
4, A. Ljapchev Blvd.
BG-1756 Sofia
Phone: +359 (0)2 / 97 44 058
Fax: +359 (0)2 / 97 44 061
e mail: —

INEA CR d.o.o. — **CROATIA**
Drvinje 63
HR-10000 Zagreb
Phone: +385 (0)1 / 3667140
Fax: +385 (0)1 / 3667140
e mail: —

AutoCont Control Systems s.r.o. — **CZECH REPUBLIC**
Nemocnicni 12
CZ-70200 Ostrava 2
Phone: +420 59 / 6152 111
Fax: +420 59 / 6152 562
e mail: consys@autocont.cz

louis poulsen industri & automation — **DENMARK**
Geminivej 32
DK-2670 Greve
Phone: +45 (0)43 / 95 95 95
Fax: +45 (0)43 / 95 95 91
e mail: lpia@lpmail.com

UTU Elektrotehnika AS — **ESTONIA**
Pärnu mnt.160i
EE-10621 Tallinn
Phone: +372 6 / 51 72 80
Fax: +372 6 / 51 72 88
e mail: utu@utu.ee

UTU POWEL OY — **FINLAND**
Box 236
FIN-28101 Pori
Phone: +358 (0)2 / 550 800
Fax: +358 (0)2 / 550 8841
e mail: tehoelektroniikka@urhotuominen.fi

UTECO A.B.E.E. — **GREECE**
5, Mavrogenous Str.
GR-18542 Piraeus
Phone: +302 (0)10 / 42 10 050
Fax: +302 (0)10 / 42 12 033
e mail: uteco@uteco.gr

Meltrade Automatika Kft. — **HUNGARY**
55, Harmat St.
HU-1105 Budapest
Phone: +36 (0)1 / 2605 602
Fax: +36 (0)1 / 2605 602
e mail: office@meltrade.hu

EUROPEAN REPRESENTATIVES

SIA POWEL — **LATVIA**
Lienes iela 28
LV-1009 Riga
Phone: +371 784 2280
Fax: +371 784 2281
e mail: utu@utu.lv

UAB UTU POWEL — **LITHUANIA**
Savanoriu Pr. 187
LT-2053 Vilnius
Phone: +370 (0)52323-101
Fax: +370 (0)52322-980
e mail: powel@utu.lt

Intehsis Srl — **MOLDOVA**
Cuza-Voda 36/1-81
MD-2061 Chisinau
Phone: +373 (0)2 / 562 263
Fax: +373 (0)2 / 562 263
e mail: intehsis@mdl.net

Getronics b.v. Control Systems — **NETHERLANDS**
Donauweg 2 B
NL-1043 AJ Amsterdam
Phone: +31 (0)20 / 587 6700
Fax: +31 (0)20 / 587 6839
e mail: info.gia@getronics.com

Motion Control Automation b.v. — **NETHERLANDS**
Markenweg 5
NL-7051 HS Varsseveld
Phone: +31 (0)315 / 257 260
Fax: +31 (0)315 / 257 269
e mail: —

Beijer Electronics AS — **NORWAY**
Teglverksveien 1
N-3002 Drammen
Phone: +47 (0)32 / 24 30 00
Fax: +47 (0)32 / 84 85 77
e mail: info@beijer.no

MPL Technology Sp. z o.o. — **POLAND**
ul. Sliczna 36
PL-31-444 Kraków
Phone: +48 (0)12 / 632 28 85
Fax: +48 (0)12 / 632 47 82
e mail: krakow@mpl.pl

Sirius Trading & Services srl — **ROMANIA**
Bd. Lacul Tei nr. 1 B
RO-72301 Bucuresti 2
Phone: +40 (0)21 / 201 7147
Fax: +40 (0)21 / 201 7148
e mail: sirius_t_s@fx.ro

ACP Autocomp a.s. — **SLOVAKIA**
Chalupkova 7
SK-81109 Bratislava
Phone: +421 (0)7 592 22 54
Fax: +421 (0)7 592 22 48
e mail: info@acp-autocomp.sk

INEA d.o.o. — **SLOVENIA**
Stegne 11
SI-1000 Ljubljana
Phone: +386 (0)1 513 8100
Fax: +386 (0)1 513 8170
e mail: inea@inea.si

Beijer Electronics AB — **SWEDEN**
Box 426
S-20124 Malmö
Phone: +46 (0)40 / 35 86 00
Fax: +46 (0)40 / 35 86 02
e mail: info@beijer.de

EUROPEAN REPRESENTATIVES

ECONOTEC AG — **SWITZERLAND**
Postfach 282
CH-8309 Nürensdorf
Phone: +41 (0) 1 / 838 48 11
Fax: +41 (0) 1 / 838 48 12
e mail: info@econotec.ch

GTS — **TURKEY**
Darülaceze Cad. No. 43A KAT: 2
TR-80270 Okmeydani-Istanbul
Phone: +90 (0) 212 / 320 1640
Fax: +90 (0) 212 / 320 1649
e mail: gts@turk.net

JV-CSC Automation — **UKRAINE**
15, M. Raskovoyi St., Floor 10, Office 1010
U-02002 Kiev
Phone: +380 (0) 44 / 238 83 16
Fax: +380 (0) 44 / 238 83 17
e mail: csc-a@csc-a.kiev.ua

EURASIAN REPRESENTATIVES

CONSYS — **RUSSIA**
Promyshlennaya St. 42
RU-198099 St Petersburg
Phone: +7 812 / 325 36 53
Fax: +7 812 / 325 36 53
e mail: consys@consys.spb.ru

ELEKTROSTYLE — **RUSSIA**
ul. Garschina 11
RU-140070 Moscow Oblast
Phone: +7 095/ 557 9756
Fax: +7 095/ 746 8880
e mail: mjuly@elektrostyle.ru

ICOS — **RUSSIA**
Ryazanskij Prospekt, 8A, Office 100
RU-109428 Moscow
Phone: +7 095 / 232 0207
Fax: +7 095 / 232 0327
e mail: mail@icos.ru

STC Drive Technique — **RUSSIA**
Poslannikov per., 9, str.1
RU-107005 Moscow
Phone: +7 095 / 786 21 00
Fax: +7 095 / 786 21 01
e mail: info@privod.ru

MIDDLE EAST REPRESENTATIVE

SHERF Motion Techn. LTD — **ISRAEL**
Rehov Hamerkava 19
IL-58851 Holon
Phone: +972 (0) 3 / 559 54 62
Fax: +972 (0) 3 / 556 01 82
e mail: —

AFRICAN REPRESENTATIVE

CBI Ltd — **SOUTH AFRICA**
Private Bag 2016
ZA-1600 Isando
Phone: +27 (0) 11 / 928 2000
Fax: +27 (0) 11 / 392 2354
e mail: cbi@cbi.co.za

Specifications subject to change without notice.
Art. no. 70754-G, Printed in Germany 07.03